Z. Säugetierkunde **65** (2000) 251–254

http://www.urbanfischer.de/journals/saeugetier

ZEITSCHRIFT FÜR SÄUGETIERKUNDE
INTERNATIONAL JOURNAL OF MAMMALIAN BIOLOGY

Comparative investigations on the efficiency of a new live trap for small mammals

By C. Noël and F. Saucy

Department of Biology, Unit of Ecology, University of Fribourg, Fribourg, Switzerland

Receipt of Ms. 17. 06. 1999
Acceptance of Ms. 25. 03. 2000

Key words: *Arvicola terrestris*, live trap, Fribourg trap, Sherman trap

A new type of multiple-capture live trap, the Fribourg trap, was designed to be used in combination with drift fences (Zukal and Gaisler 1992; Kirkland and Sheppard 1994) to capture juvenile fossorial vole *Avricola terrestris* above-ground. Previously, Saucy and Schneiter (1997) have shown that young animals, usually less than two months old and lighter than 65 g, disperse en masse above-ground during rainy nights. The aim of our work was to develop an effective, robust and inexpensive trap to live-trap these dispersers. In this study, we evaluate the efficiency of the Fribourg trap by comparing it to the Sherman trap, model LNA. The Fribourg trap (Fig. 1) is a two-entry trap (9×6×50 cm), made of opaque plastic sheath tubing (Tehalit GmbH, Germany; NFC68–102 667). Both its sides are equipped with slanted doors made of wire netting bent at the base (Fig. 1). This mechanism was designed by Dr. H. Niemeyer and R. Fus (Niedersächsische Forstliche Versuchsanstalt, Göttingen, Germany; Patent No P 19542089.6), and is currently commercialised by Grube KG (Hützel, Germany). Voles and mice will readily push and lift up the one-way, wire netting door, but are unable to perform the opposite movement once caught inside the trap. This mechanism can easily be implemented at the two ends of a trap, thus giving it the aspect of an open tunnel in which light can enter from both ends. The top of the trap is removable which facilitates handling of the animals. The solidity of the trap is enhanced using transversal, narrow plastic bars.

To test the efficiency of the new trap, a comparison with Sherman traps was conducted along the borders of two adjacent 0.5 ha trapping plots (50×100 m), set up in permanent grassland. Drift fences surrounded the two plots to improve above-ground trapping efficiency (Zukal and Gaisler 1992; Kirkland and Sheppard 1994). Trapping was carried out continuously from 28. 4. 98 until 30. 11. 98. Fifty trapping stations were regularly spaced at 6 m intervals along the inner side of each enclosure, thus alternating Fribourg traps (one per station) and Sherman traps (two per station, placed back to back, the entrances in opposite directions). Therefore, a total of 50 Fribourg traps was compared to 50 pairs of LNA Sherman traps, for a total trapping-effort of 32,550 trap nights.

Traps were fastened to the ground with bent iron pegs. No baits were used and traps were checked once a day in the morning. A mirror fixed to a pole was used to examine Fribourg traps. The trapped animals were released outside the plots after having been sexed and marked by fur clipping. Furthermore, *A. terrestris* were classified based on their body weight (Airoldi 1976) as juveniles (< 45 g), subadults (45–64 g) and adults (≥ 65 g).

A total of 1 057 captures was recorded above-ground during 217 consecutive nights, i. e. 4.9 captures/night. Among these 1 057 captures, there were 861 fossorial *Arvicola terrestris* (81.5%), 154 other small mammals (14.6%), 35 amphibians and 7 birds (Tab. 1).

0044-3468/00/65/04 – 251 $ 15.00/0

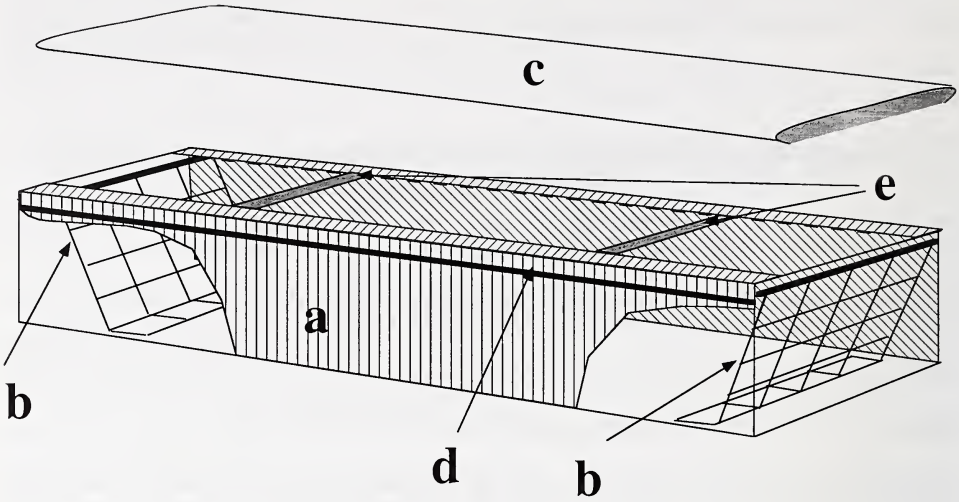

Fig. 1. Design of the Fribourg trap made of plastic electrical sheath tubing. a: body; b: trap-door, rotating around its top axis (Patent No P 19542089.6); c: lid; d: lateral grooves for insertion of the lid; e: tranversal strengthening pieces.

Table 1. Distribution of captures among the two kinds of trapping stations. Sherman: 2 traps per station, i. e. 2 × 50 = 100 traps; Fribourg: 1 trap per station, i. e. 50 traps.

Organisms	Total	Sherman	Fribourg	χ^2	P
Arvicola terrestris	861	335	526	42.4	< 0.001
Other small mammals	154	138	16	96.6	< 0.001
Amphibians	35	26	9	8.3	< 0.05
Birds	7	6	1	–	–
Total	1 057	505	552	2.1	> 0.05

Captures of other mammals included mostly *Apodemus sylvaticus* and *A. flavicollis* (N = 84), common and field voles *Microtus arvalis* and *M. agrestis* (N = 40), as well as occasional captures of *Clethrionomys glareolus* (N = 6), *Mus musculus* (N = 6), *Muscardinus avellanarius* (N = 1), *Sciurus vulgaris* (N = 1), *Crocidura russula* (N = 8), *Sorex araneus/coronatus* (N = 2) and stoats (*Mustela erminea* N = 6). Amphibians included the frogs *Rana temporaria* (N = 10) and *R. esculenta/lessonae* (N = 12) and the toads *Bufo bufo* (N = 7) and *B. calamita* (N = 6). Bird captures consisted of three yellow-hammers *(Emberiza citrinella)*, one robin *(Erithacus rubecula)*, two great tits (*Parus major*) and one wren (*Troglodytes troglodytes*).

The 1 057 captures were about equally distributed between Sherman and Fribourg trapping stations, with 505 and 552 captures, respectively ($\chi^2 = 2.1$, df = 1, $p > 0.05$). However, two thirds of fossorial *A. terrestris*, (N = 526, i. e. 61.1%) were caught in Fribourg trapping stations, indicating that single Fribourg traps were significantly more efficient for this species than pairs of Sherman traps ($\chi^2 = 42.4$, df = 1, $p < 0.001$; Tab. 1). Sex ratio ($\chi^2 = 0.9$, df = 1, $p > 0.05$) and weight distribution of *A. terrestris* were not different between the two kinds of trapping stations (mean weight for Sherman: 47.2 g ± 13.8 SD; and for Fribourg: 48.4 g ± 14.3 SD; t = 1.3, df = 826, $p > 0.05$). About 90% of all individuals captured were juveniles or subadults. Unlike *A. terrestris*, other small mammals and amphibians were signif-

icantly more abundant in Sherman than in Fribourg trapping stations ($\chi^2 = 96.6$, df = 1, $p < 0.001$ for small mammals and $\chi^2 = 8.3$, df = 1, $p < 0.05$ for amphibians; Tab. 1). Because of their small number, birds were not taken into consideration for further analysis.

The efficiency of the Fribourg trap as a multiple-capture trap was demonstrated by the fact that in 49 cases, two *A. terrestris* were simultaneously caught in the same trap for a total of 98 captures (18.6% of the 526 captures in Fribourg traps). By comparison, only in 19 cases both Sherman traps of a station were occupied ($\chi^2 = 8.2$, df = 1, $p < 0.01$), corresponding to 38 out of 335 captured animals (11.3%). The combinations of sexes in double captures were not significantly different between the two trap types ($\chi^2 = 2.3$, df = 2, $p > 0.05$). We observed a random distribution of the sexes, following the expected frequencies for a sex ratio 1 : 1 in the population i. e. about 25% female-female, 25% male-male and 50% male-female pairs. Similarly, the combinations of age groups did not differ between Sherman and Fribourg traps ($\chi^2 = 0.4$, df = 2, $p > 0.05$). Double captures consisted essentially of subadults and/or juveniles together. Concerning mortality, we found no difference between the two kinds of traps ($\chi^2 = 0.1$, df = 1, $p > 0.05$).

Among the very large number of traps designed to catch small mammals, there are few two-entry or multiple-capture live traps. Among the former, a wire, two-entry, single-capture trap for *A. terrestris* developed by Pelz (1995) is worth mentioning, while among the latter, the Fitch, Burt and Ugglan multiple-capture traps are commonly used in North America and Europe (Rose et al. 1977; Getz et al. 1993; Jensen et al. 1993). In contrast, the Fribourg trap combines both properties, having two entries and allowing multiple captures. This trap is cheap, easy to build and robust. It uses plastic material, which offers a better insulation than metal traps. In addition, unnecessary handling of empty traps can be avoided by using a mirror for checking. Furthermore, casual observation of the animals' behaviour suggests that the voles are less stressed in Fribourg traps.

Our results clearly indicate that the new mechanism is very selective and efficient for capturing fossorial *Arvicola terrestris*, a rodent whose adult body mass may exceed 100 g (Reichstein 1982). In our study, we mostly caught immature individuals in both kinds of traps. However, this does not indicate a size-selectivity of the traps because adult animals rarely wander above-ground (Saucy and Schneiter 1997).

Our comparison shows that each single Fribourg trap captures 1.6 times more *A. terrestris* than a Sherman trapping station. This difference can be partly attributed to multiple captures in Fribourg traps. In our opinion, two explanations are possible for multiple captures. Firstly, animals inside the trap may attract a second animal. However, no particular affinity between sexes was observed. This is not surprising, because most voles in the traps were sexually immature. Secondly, it is possible that animals following each other enter the same trap together. The mechanism tested in this study is quite silent and may therefore allow for such a behaviour to occur. The same is true for Fitch traps that were also shown to be superior to Sherman traps (Rose et al. 1977). Another explanation for the efficiency of Fribourg traps to catch *A. terrestris* could be their tunnel-like shape, which offers a potential exit to the animals. It is surprising, however, that such a tunnel seems to have no effect on the captures of other small mammals. Yet, the same mechanism may be more efficient for capturing smaller species when narrow entrances and lighter flaps are used. Thus, a similar trap may be designed to achieve an effective sampling of the entire small mammal community.

Acknowledgements

We are very thankful to Hans Krüger who drew our attention to the mechanism used in the Fribourg trap and to D. Meyer, R. K. Rose, and R. Stocker for comments on the manuscript. This study was supported by Swiss Science National Foundation grant 31-42498.94.

References

Airoldi, J.-P. (1976): Expériences de capture et recapture chez le Campagnol terrestre, *Arvicola terrestris scherman* Shaw (Mammalia, Rodentia). Terre Vie **30**, 31–51.

Getz, L. L.; McGuire, B.; Pizzuto, T.; Hofmann, J. E.; Frase, B. (1993): Social organization of the prairie vole (*Microtus ochrogaster*). J. Mammalogy **74**, 44–58.

Jensen, P. M.; Stenseth, N. C.; Framstad, E. (1993): Trapability of the Norwegian lemming (*Lemmus lemmus*). In: The Biology of Lemmings. Ed. by N. C. Stenseth and R. A. Ims. London: The Linn. Soc. London, Acad. Press. Pp. 547–554.

Kirkland, G. L.; Sheppard, P. K. (1994): Proposed standard protocol for sampling small mammal communities. In: Advances in the Biology of Shrews. Ed. by J. F. Merritt, G. L. Kirkland, and R. K. Rose. Pittsburgh, PA: Carnegie Mus. of Nat. Hist. Pub. No **18**. Pp. 277–283.

Pelz, H.-J. (1995): Eine einfache Drahtfalle zum Lebendfang von Schermäusen, *Arvicola terrestris* (L.). In: Methoden feldökologischer Säugetierforschung. Bd. 1. Ed. by M. Stubbe, A. Stubbe, and D. Heidecke. Halle/Saale: Wissenschaftliche Beiträge der Martin-Luther-Universität Halle–Wittenberg. Pp. 291–294.

Reichstein, H. (1982): *Arvicola terrestris* (Linnaeus, 1758) – Schermaus. In: Handbuch der Säugetiere Europas. Vol. 2/I Nagetiere II, Ed. by J. Niethammer and F. Krapp. Wiesbaden: Akad. Verlagsges. Pp. 217–252.

Rose, R. K.; Slade; N. A.; Honacki, J. H. (1977): Live trap preference among grassland mammals. Acta Theriol. **22**, 296–307.

Saucy, F.; Schneiter. B. (1997): Juvenile dispersal in the vole *Arvicola terrestris* during rainy nights: a preliminary report. Bull. Soc. Vaudoise Sci. Nat. **84**, 333–345.

Zukal, J.; Gaisler, J. (1992): Testing a new method of sampling small mammal communities. Folia Zool. **41**, 299–310.

Authors' address: Christophe Noël, Department of Biology, Unit of Ecology, University of Fribourg, Pérolles, CH-1700 Fribourg, Switzerland (e-mail: christophe.noel@unifr.ch)
Francis Saucy, Au Village, CH-1641 Vuippens, Switzerland