ÖGH Herpetozoa
Austrian Herpetological Society

Herpetozoa 34: 201–205 (2021)
DOI 10.3897/herpetozoa.34.e67271

Choice of tree holes as oviposition sites by *Kurixalus eiffingeri* on Iriomote Island

Taku Christopher Sato[1], Noriko Iwai[1]

1 *Department of Ecoregion Science, Tokyo University of Agriculture and Technology, 3-5-8 Saiwai-cho, Fuchu, Tokyo 183-0054, Japan*

http://zoobank.org/EF4FFE38-4F9A-464E-A944-5767BC8B4549

Corresponding author: Noriko Iwai (iwain@cc.tuat.ac.jp)

Academic editor: Günter Gollmann ♦ **Received** 13 April 2021 ♦ **Accepted** 21 September 2021 ♦ **Published** 20 October 2021

Abstract

Oviposition site choice affects survival and growth of offspring, particularly in frogs in which the offspring cannot move from the oviposition site. We intended to find the features of tree holes used for oviposition by *Kurixalus eiffingeri* on Iriomote Island. We measured eight tree hole variables to determine which should be included in the best model to explain breeding use by *K. eiffingeri*. Out of 32 tree holes examined, we found five that were used for oviposition. The best model included the height above the ground and angle of opening. Higher located tree holes and a larger opening angle were associated with more frequent oviposition by *K. eiffingeri*. This trend may be due to the higher predation risk in lower tree holes with a steeper opening. The importance of the height of the breeding site above ground was also noted in a previous study on bamboo stumps in Taiwan, but the opening angle was only salient in this study. Our study suggested that the same species in different ecosystems may use different criteria when choosing oviposition sites.

Key Words

breeding, Japan, *Kurixalus eiffingeri*, opening angle, parental care, Rhacophoridae, Taiwan

Introduction

Oviposition site choice affects survival and growth of offspring (Resetarits et al. 2018). Animals need to determine an optimal oviposition site by correctly judging the site's suitability for their offspring. The offspring of frogs cannot move from the oviposition site until they obtain mobility through metamorphosis and, thus, the parental site choice strongly affects larval success (Rudolf and Rödel 2005; Pintar and Resetarits 2017). Several studies have shown that female frogs choose water bodies, based on multiple variables, including desiccation risk and ease of access by predators (Rudolf and Rödel 2005; Garcia et al. 2013; Resetarits et al. 2018). Most studies on this subject have shown oviposition site choice in one typical environment for a species. However, if a species inhabits different areas using different environments for breeding, it may use different criteria for each environment.

Kurixalus eiffingeri is a small arboreal frog (Rhacophoridae) with a snout-vent length of 30–40 mm, which inhabits Ishigaki Island, Iriomote Island and Taiwan (Maeda and Matsui 1999). These frogs use small water bodies in a cup-shaped cavity, such as tree holes or bamboo stumps. For oviposition, they lay eggs above the water line on the inner walls of the cavity. The vertical distribution of the eggs on walls is important, as the eggs far from water may suffer the risk of desiccation and those close to water may suffer hypoxia or predation (Kam et al. 1998). Hatchling tadpoles drop into the water and grow until metamorphosis, while females lay unfertilised eggs directly into the water to provide tadpoles with a food source (Ueda 1986; Chen et al. 2000). Maternal care is essential for the growth and survival of tadpoles, which incurs great cost to females (Kam et al. 1997; Chen et al. 2000). This species is an excellent model for examining the criteria by which females select oviposition sites. Every site chosen

Copyright *Taku Christopher Sato, Noriko Iwai.* This is an open access article distributed under the terms of the Creative Commons Attribution License (CC BY 4.0), which permits unrestricted use, distribution, and reproduction in any medium, provided the original author and source are credited.

for an oviposition event is an independent water body, allowing an individual assessment of the correspondence between site preference and site characteristics.

Studies on *K. eiffingeri* have been conducted mainly in the bamboo forests of Taiwan (Kam et al. 1996; Lin and Kam 2008; Tung et al. 2015). Lin and Kam (2008) showed that *K. eiffingeri* prefers to use higher bamboo stumps with deeper cups and with deeper water for oviposition, possibly to reduce desiccation risk. These choice criteria, however, might differ from those applied by *K. eiffingeri* in a non-bamboo forest, where they use tree holes instead of bamboo stumps as oviposition sites. Tree holes and bamboo stumps have different features. For example, tree holes are not uniform or simple in shape; they can be partially covered by bark and may have small openings. The water of tree holes may originate from stem-flow, whereas that of bamboo stumps originates from rainfall (Lin and Kam 2008). As these differences may affect the chances of larval success, the criteria applied to bamboo stumps will not necessarily be relevant to tree holes.

In this study, we intended to find the important variables in using tree holes for oviposition by *K. eiffingeri* in non-bamboo forests on Iriomote Island, Japan. We conducted field surveys and analysed which tree-hole characteristics should be included in the model that best explains site choice by *K. eiffingeri*. We discuss how and why these variables differ from those utilised by the same species inhabiting the bamboo forests of Taiwan.

Materials and methods

We conducted surveys in three swamps in and around Iriomote Station of the Tropical Biosphere Research Center (24°40'23"N, 123°80'40"E, Fig. 1). The sites are located in a tropical climate with an annual mean temperature of 23.7 °C, a humidity of 79% and annual precipitation of 2300 mm (Japan Meteorological Agency, https://www.jma.go.jp/jma/menu/menureport.html, 11 March 2020). The vegetation at all sites is dominated by *Barringtonia racemosa*. The swamps become completely submerged after rain, but typically do not support water flow; instead, water bodies tend to form in discrete patches and produce dense mud.

To examine the characteristics of the tree holes selected for oviposition by *K. eiffingeri*, we conducted field surveys in the breeding season. *Kurixalus eiffingeri* breeds throughout the year and its mating calls at the survey site were counted more often from November to March (Sato and Iwai, unpublished data); thus, we conducted a survey in February 2018. We searched for tree holes by walking the sites and checking every tree we encountered. For any tree hole that we found, we measured the tree diameter at breast height (DBH), water depth, water surface area and the height and perimeter of the hole (Table 1). These were measured using a steel tape to 0.1 cm. The presence of *K. eiffingeri* eggs or tadpoles was noted as an indication of oviposition use. In the following August, we re-visited the site and measured three additional variables: cup depth, opening angle (0 when the opening is horizontal and 90 when it is vertical, Fig. 2) and entrance area of the tree hole. Cup depth and major and minor axes of the hole were measured using a plastic measure to 0.1 cm and opening angle was measured using a protractor to 1 degree. We chose the variables expecting to relate to the choice criterion: water depth, water surface area, opening angle and entrance area are variables related to desiccation and flooding (suggested to be important features from Kam et al. 2008; Lin and Kam 2008). Cup height, cup depth, opening

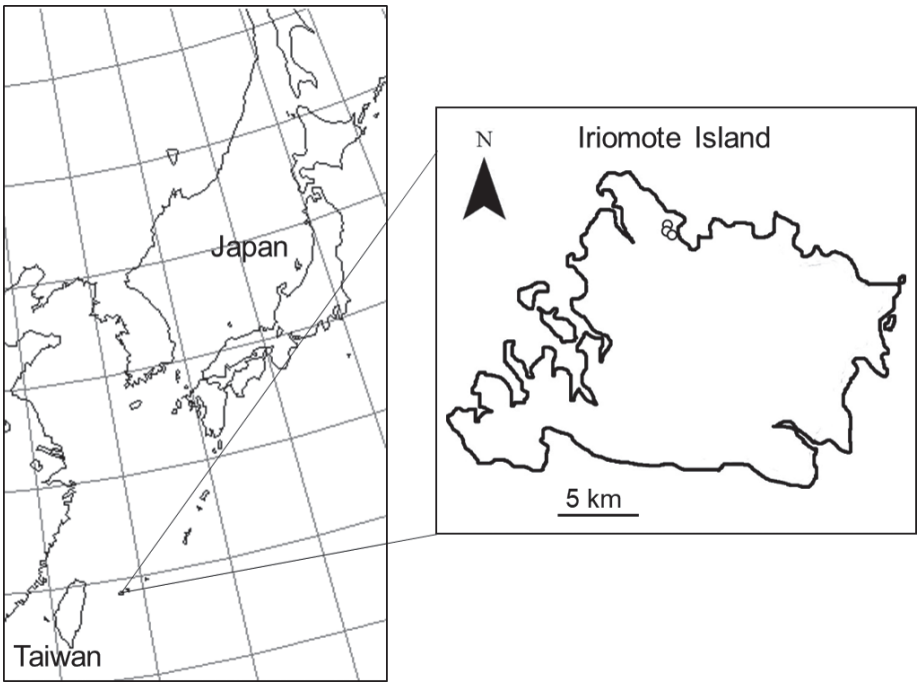

Figure 1. Map of study sites. White circles on Iriomote Island show the location of the sites.

Table 1. Parameter descriptions and measurements of tree holes used or unused by *K. eiffingeri* for oviposition. Values are from the survey in February (no asterisk) or in August (*). We were unable to check for breeding use in one of the tree holes, could not measure the angle of the opening in another one and could not find three tree holes in August; these were excluded from the analysis.

Variable	Description	Unused			Used		
		Mean ± SD	Range	n	Mean ± SD	Range	n
Diameter at breast height (cm)	Tree diameter at breast height, calculated from the perimeter length.	11.2 ± 10.5	2.3–44.4	27	10.5 ± 4.3	4.1–16.7	5
Water depth (cm)	The length from the bottom to the surface of the pooled water in a tree hole.	2.1 ± 2.4	0.2–12.3	27	1.6 ± 0.8	0.6–2.4	5
Water surface area (cm²)	Surface area of the pooled water in a tree hole, estimated from major and minor axes as an ellipse.	45.4 ± 48.6	3.6–226.8	27	26.4 ± 13.3	11.0–44.8	5
Cup height (cm)	The distance from the ground to the opening of a tree hole.	68.9 ± 29.5	23.2–131.0	27	106.0 ± 34.9	47.1–148.2	5
Perimeter of hole (cm)	Total length around the opening of a tree hole.	76.6 ± 31.6	33.6–171.6	27	58.6 ± 20.9	30.5–93.4	5
Cup depth (cm)*	See Fig. 2.	3.6 ± 2.8	1.0–14.0	24	2.8 ± 1.4	1.4–5.2	5
Opening angle (°)*	See Fig. 2.	26.7 ± 24.3	0.0–88.0	23	44.0 ± 21.5	10.0–75.0	5
Area of entrance (cm²)*	The area of the opening section of a tree hole, estimated from major and minor axes as an ellipse.	58.7 ± 62.8	11.3–301.2	24	27.4 ± 13.6	12.9–46.6	5

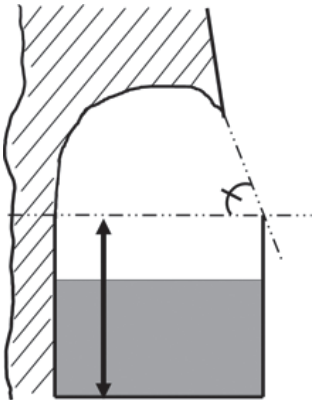

Figure 2. Cup depth (arrow) and opening angle (arc) of a tree hole.

angle and entrance area are variables related to predation (suggested to be important features from Chuang et al. 2017). Tree diameter at breast height and cup height are variables related to the ease of finding by parental frogs (suggested to be important features from Chen et al. 2000). We did not find any oviposition use in the August survey.

We determined the factors constituting the selection criteria of *K. eiffingeri* by model selection. In the model selection, we used explanatory variables data from measurements made both in February and August, because the tree-hole characteristics measured in August (cup depth, opening angle and entrance area of the tree hole) were expected to be the same in February. We first considered correlations amongst the values of the eight tree-hole characteristics we assessed. The high correlations were: perimeter of tree hole and DBH (R = 0.77), water surface area and entrance area of tree hole (R = 0.75) and cup depth and water depth (R = 0.91). The variables DBH, entrance area of tree hole and cup depth were eliminated from the full model to be considered in discussion when the counterpart variable was included in the model. The remaining characteristics were included as explanatory variables regarding oviposition use (1/0) by *K. eiffingeri* and the distribution was binomial. The model with the lowest AICc value was deemed the best fit. Statistical analysis was carried out using the software R (R Core Team 2018) with the MuMIn package (Bartoń 2020).

Results

We found 33 tree holes, five of which contained *K. eiffingeri* eggs or tadpoles (measurements shown in Table 1). We were unable to check for oviposition in one of the tree holes, could not measure the angle of the opening of another one and could not find three tree holes in August for additional measurements; these tree holes were, therefore, excluded from the analysis.

The best model included height and opening angle (breeding use probability = 1 / [1 + exp{-0.047×height - 0.044×opening angle + 7.15}]). Higher tree holes and larger opening angles were associated with higher oviposition use probability by *K. eiffingeri* (Fig. 3).

Discussion

We found tadpoles and eggs of *K. eiffingeri* more often in holes that were located higher on the trees on Iriomote Island. Although we might have overlooked the holes higher up in the trees, our results confirmed that *K. eiffingeri* were found less in holes close to the ground. The preference for a higher location was also observed in previous studies in Taiwan, where this species uses bamboo stumps for breeding (Lin and Kam 2008). Researchers posited that *K. eiffingeri* choose taller stumps because they are less covered by herbaceous plants on the forest floor than shorter stumps and can, therefore, receive more rainwater, which reduces the desiccation risk (Lin and Kam 2008). The tree holes in our study sites were at a height of 23.2–184.0 cm (mean ± SD; 79.2 ± 38.4), which is higher than the bamboo stumps (36.6 ± 14.5 cm, n = 107; Lin and Kam 2008). In another study of *K. eiffingeri* on Iriomote Island, Ueda (1986) showed that the tree holes used for breeding by *K. eiffingeri* were at a height of 50–150 cm, which coincides with our results. Thus, tree holes on Iriomote Island are located higher than the forest floor plants, eliminating possible adverse effects by forest floor plants. We found that *K. eiffingeri* tadpoles were preyed upon by *Dinodon rufozonatum walli* snakes at a tree hole height of 39 cm (Iwai and Sato 2018), which was the lowest of the five holes used for oviposition. The more frequent use

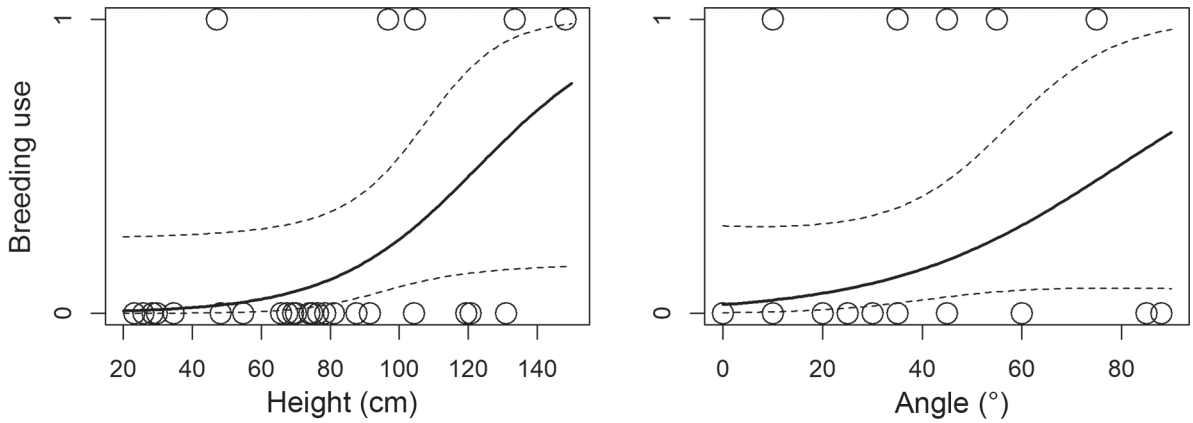

Figure 3. The relationship between the height (left) or opening angle (right) of tree holes and use for oviposition by *K. eiffingeri*. Lines show the partial effects of each variable with the value of the other variable held constant at its mean with dotted lines as upper and lower 95% confidence interval.

of higher tree holes and bamboo stumps may be because it helps reduce the risk of predation by ground predators.

Tree holes with openings at a large angle were more used by *K. eiffingeri* on Iriomote Island. This frequent use may be because such openings often provide more coverage over the water. This cover may come with more stems over the hole and, thus, direct stem-flow or may decrease the evaporation, which decreases the desiccation risk. Additionally, such a protective cover may reduce the visibility of the water surface, thereby decreasing the predation risk from above, such as from birds. This type of cover may also provide more area for oviposition because *K. eiffingeri* uses the interior wall of the tree trunk above the waterline. No studies have yet examined any of these hypotheses and further research is needed.

Variables associated with desiccation risk, such as a cup depth or water depth, were not included in the best model, although these variables are important for *K. eiffingeri* in Taiwan using bamboo stumps (Lin and Kam 2008). In our study, the mean cup depth and water depths of used tree holes were 2.8 cm and 1.6 cm, respectively, whereas those of bamboo stumps in the study by Lin and Kam (2008) were 12.5 cm and 6.2 cm, respectively. Choice based on cup depth or water depth may not be applicable to *K. eiffingeri* on Iriomote Island because the holes we found there were generally shallow. In addition, depth may be a more relevant factor when applied to the selection of bamboo stumps, because these tend to have no cover. Greater cup depth or water depth would reduce sunlight penetration in bamboo stumps (Lin and Kam 2008), which is not a consideration for tree holes because they are often covered by the trunks. Therefore, the opening angle, which corresponds to the degree of cover over the hole, may be an important factor in determining the amount of sunlight penetration in tree holes. Thus, for the frogs using tree holes, incorporating the opening angle into site selection criteria might increase fitness more than the inclusion of water capacity, given the limited range of the latter variable in our survey.

Our results showed that the number of tree holes used by *K. eiffingeri* was small. Indeed, out of 32 tree holes examined at three sites, we only found five tree holes used by *K. eiffingeri* even if the survey was conducted when their breeding activity was expected to be high (with frequent mating calls). Similarly, Ueda (1986) found only seven tree holes used by *K. eiffingeri* in two surveys. This pattern suggests that tree holes, suitable for *K. eiffingeri* oviposition, may be rare on Iriomote Island, leading to multiple uses of tree holes by different individuals. This assumption is substantiated by the finding that, even in abundant bamboo stumps, reuse of the same stumps by multiple *K. eiffingeri* individuals occurs (Kam et al. 1996; Lin et al. 2008; Tung et al. 2015). We observed tadpoles at different stages of development and newly-oviposited eggs (not a food source for tadpoles, because they were fertilised and developing) simultaneously occupying the same hole. This behaviour indicates that *K. eiffingeri* of Iriomote Island may use stringent selection criteria, leading them to use particular tree holes multiple times. This tendency could have potentially negative consequences, such as severe intraspecific competition (Chen et al. 2001; Kam et al. 2001); alternatively, there may be benefits to this behaviour, such as a reduction in the burden of parental care. An interesting potential future study could investigate the interacting effects of oviposition site scarcity and breeding strategy in this species.

Acknowledgements

We thank T. Yoshida for his help in finding study sites and Tropical Biosphere Research Center for allowing us to use the sites. This study was financially supported by JSPS KAKENHI Grant Number JP16K07775.

References

Bartoń K (2020) MuMIn: Multi-Model Inference. R package version 1.43.17. https://CRAN.R-project.org/package=MuMIn

Chen TC, Kam YC, Chen YH, Tsai IR (2000) Maternal brood care of an arboreal breeder, *Chirixalus eiffingeri* (Anura: Rhacophoridae) from Taiwan. Behaviour 137: 137–151. https://doi.org/10.1163/156853900501917

Chen YH, Su YJ, Lin YS, Kam YC (2001) Inter-and intraclutch competition among oophagous tadpoles of the Taiwanese tree frog, *Chirixalus eiffingeri* (Anura: Rhacophoridae). Herpetologica 57: 438–448.

Chuang MF, Lee WH, Sun JS, You CH, Kam YC, Poo S (2017) Predation risk and breeding site value determine male behavior and indirectly affect survivorship of their offspring. Behavioral Ecology and Sociobiology 71: e122. https://doi.org/10.1007/s00265-017-2349-6

Garcia CG, Lescano JN, Leynaud GC (2013) Oviposition-site selection by *Phyllomedusa sauvagii* (Anura: Hylidae): An arboreal nester inhabiting arid environments. Acta Oecologia 51: 62–65. https://doi.org/10.1016/j.actao.2013.06.001

Iwai N, Sato T (2018) A report of predation on tadpoles of *Kurixalus eiffingeri* by *Dinodon rufozonatum walli*. Bulletin of Herpetological Society of Japan 2018(2): 171–172.

Kam YC, Chuang ZS, Yen CF (1996) Reproduction, oviposition-site selection, and tadpole oophagy of an arboreal nester, *Chirixalus eiffingeri* (Rhacophoridae), from Taiwan. Journal of Herpetology 30: 52–59. https://doi.org/10.2307/1564706

Kam YC, Chen YH, Chuang ZS, Huang TS (1997) Growth and development of oophagous tadpoles in relation to brood care of an arboreal breeder, *Chirixalus eiffingeri* (Rhacophoridae). Zoological Studies 36: 186–193.

Kam YC, Su YJ, Liu JL, Lin YS (2001) Intraspecific interactions among oophagous tadpoles (*Chirixalus eiffingeri*: Rhacophoridae) living in bamboo stumps in Taiwan. Journal of Zoology 255: 519–524. https://doi.org/10.1017/S0952836901001601

Lin YS, Kam YC (2008) Nest choice and breeding phenology of an arboreal-breeding frog, *Kurixalus eiffingeri* (Rhacophoridae), in a bamboo forest. Zoological Studies 47: 129–137.

Lin YS, Lehtinen RM, Kam YC (2008) Time- and context-dependent oviposition site selection of a phytotelm-breeding frog in relation to habitat characteristics and conspecific cues. Herpetologica 64: 413–421. https://doi.org/10.1655/08-020R1.1

Maeda N, Matsui M (1999) Frogs and Toads of Japan. Bun-ichi Sogo Shuppan, Tokyo, 223 pp.

Pintar MR, Resetarits WJ (2017) Relative predation risk and risk of desiccation co-determine oviposition preferences in Cope's gray treefrog, *Hyla chrysoscelis*. Oecologia 184: 423–430. https://doi.org/10.1007/s00442-017-3875-7

R Core Team (2018) R: A language and environment for statistical computing. R Foundation for Statistical Computing, Vienna. https://www.R-project.org/

Resetarits WJ, Bohenek JR, Breech T, Pintar MR (2018) Predation risk and patch size jointly determine perceived patch quality in ovipositing treefrogs, *Hyla chrysoscelis*. Ecology 99: 661–669. https://doi.org/10.1002/ecy.2130

Rudolf VHW, Rödel MO (2005) Oviposition site selection in a complex and variable environment: the role of habitat quality and conspecific cues. Oecologia 142: 316–325. https://doi.org/10.1007/s00442-004-1668-2

Tung WP, Chen YH, Cheng WC, Chuang MF, Hsu WT, Kam YC, Lehtinen RM (2015) Parentage of overlapping offspring of an arboreal-breeding frog with no nest defense: Implications for nest site selection and reproductive strategy. PLoS ONE 10: e0123221. https://doi.org/10.1371/journal.pone.0123221

Ueda H (1986) Reproduction of *Chirixalus eiffingeri* (Boettger). Scientific Report of the Laboratory for Amphibian Biology 8: 109–116.

ZOBODAT - www.zobodat.at

Zoologisch-Botanische Datenbank/Zoological-Botanical Database

Digitale Literatur/Digital Literature

Zeitschrift/Journal: Herpetozoa

Jahr/Year: 2021

Band/Volume: 34

Autor(en)/Author(s): Sato Taku Christopher, Iwai Noriko

Artikel/Article: Choice of tree holes as oviposition sites by Kurixalus eiffingeri on Iriomote Island 201-205