Linzer biol. Beitr.	50/1	855-863	27.7.2018

Theoretical and experimental study on the nymphal growth of the Australian field cricket (Insecta: Orthoptera)

Robert STURM

A b s t r a c t : The present contribution deals with a multi-compartment model simulating nymphal growth of hemimetabolous insects. In general, a horwmonal growth rate (W_h) can be distinguished from an intrinsic growth rate (W_i), whereby the second factor includes the increase of nymphal size due to food consumption. Besides this basic assumption the theoretical approach also considers the possible influence of external factors (environmental temperature, available food resources, circadian cycle, intraspecific competition) on insect growth. Model application and validation were carried out for *Teleogryllus commodus* WALKER 1869, where also experimental data of nymphal development are available. Preliminary modeling results correspond very well with comparable experimental data (r: 0.97-99). Basically, a significant dependence of nymphal growth on environmental temperature can be recognized.

K e y w o r d s : Nymphal growth, hemimetabolous insect, multi-compartment model, growth rate, cricket, *Teleogryllus commodus*.

Introduction

Since the legendary work of J. B. S. HALDANE (1927) research of growth physiology within the class of insects has experienced a considerable accretion. Until the middle of the last century, insect science favored the hypothesis that growth and maturation of a given species can be exclusively regarded as the consequence of food intake (BAKKER 1959, HOFFMANN 1985). Currently, it is considered a proven fact that holometabolous insects are able to temporarily disconnect their larval growth from direct food intake, because they can hark back to respective energy reserves stored in the body. This process is mainly controlled by insect hormones (JH, EH, PTTH) and the cellular signal cascades induced by them (CONLON & RAFF 1999, STERN 2003). In the case of the fruit fly *Drosophila melanogaster* organ and body growth is additionally influenced by so-called DILPs (*Drosophila* insulin-like peptides), whereby quantitative production of these hormones shows a remarkable dependence on the amount of ingested food and occurs in small cell agglomerations of the insect brain. Intensity of larval growth correlates with the concentration of DILPs in the hemolymph. According to a recent theory these hormones regulate the absorption of nutrients from the hemolymph into the the cells of the growing structures (BAKKER 1959, NIJHOUT et al. 2006, SHINGLETON et al. 2007).

With regard to hemimetabolous insects higher numbers of larval (nymphal) instars associated with greater time spans of nymphal development can be observed. Most cricket species are characterized by a duration of larvogenesis ranging from 50 to 100 days, whereby the organism strides through 8 to 14 instars (Fig. 1; WEBER & WEIDNER 1974, CHAPMAN 1998, SHINGLETON et al. 2008, STURM 1999, 2002a, 2003a, 2016a). As

found by comprehensive experimental studies, each nymphal instar of a hemimetabolous insect is distinguished by individual growth rates being associated with particular concentrations of various growth hormones (MERKEL 1977, BEHRENS et al. 1983, HOFFMANN 1985).

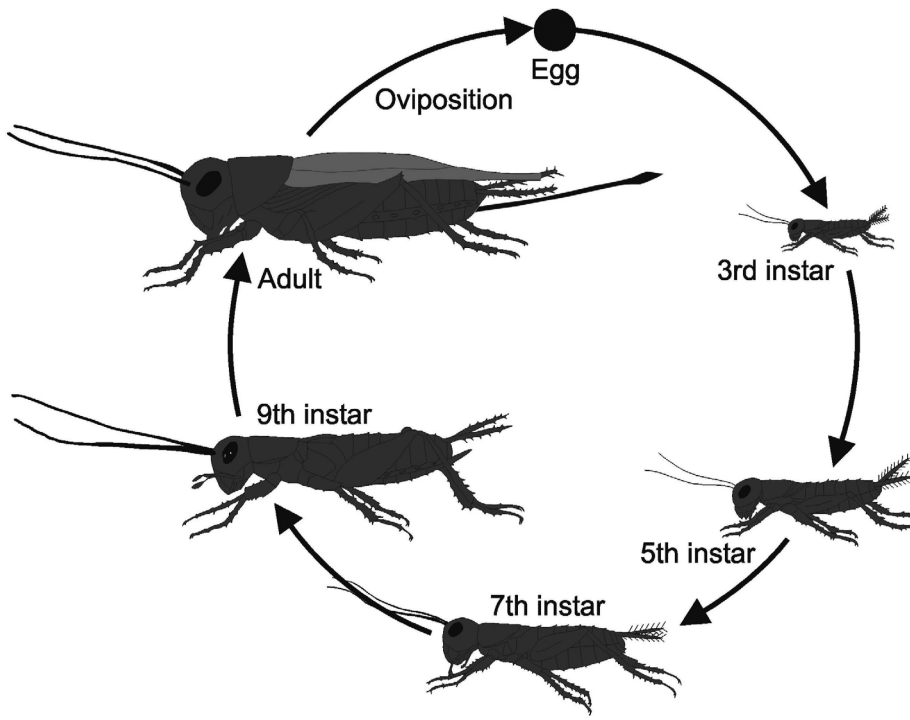

Fig. 1: Development of hemimetabolous insects (e.g., crickets) with a predefined number of nymphal instars. Duration of larvogenesis among other depends on external factors such as environmental temperature.

Theoretical models dealing with the larval or nymphal growth of insects are chiefly founded upon specific cycles of food intake and hormone production. It is hypothesized that the quality and quantity of the ingested food has a remarkable influence on the DILP level, establishing a relationship between physiological processes on the one hand and environmental conditions on the other. Previous studies could demonstrate that environmental temperature may be regarded as primary control factor concerning insect development (DAMOS & SAVOPOULOU-SOULTANI 2008, 2012). In early growth models this phenomenon was considered by definition of the law of total effective temperatures (HILBERTAND & LOGAN 1983, WAGNER et al. 1984), whereas modern approaches are based on the assumption that insects only perform an optimal development within a specific temperature interval. Outside this thermal range developmental rates are subject to a continuous decrease and final cessation (DAMOS & SAVOPOULOU-SOULTANI 2008, 2012, STURM 2016a).

In general, linear models describing a linear relationship between temperature and insect development can be distinguished from non-linear approaches, where the thermal effect on nymphal growth is commonly expressed by polynomials of higher degree. The second model type is characterized by the circumstance that developmental rates become maximized at optimum temperatures and rapidly approach the zero-value outside this preferential thermal frame. Most current models offer a simulation of insect development in biophysical and biochemical terms, whereby enzymatic reactions play a superior role. According to the equations formulated by VAN'T HOFF (1901), ARRHENIUS (1889), and EYRING (VAN DE HAVE 2008) these reactions are also strongly influenced by thermal conditions.

In the present contribution nymphal growth of insects is presented in terms of a multi-compartment model including numerous aspects described above. The transfer rates between the compartments represent non-linear functions which among other depend on several environmental factors. The approach is used for the simulation of nymphal growth of the Australian field cricket *Teleogryllus commodus*. Thereby, theoretical results are compared with experimental data.

Material and Methods

Description of the theoretical model

Larval or nymphal growth of insects represents a multi-phase process with each phase constituting a developmental stage. For that reason a multi-compartment model was developed, where each compartment corresponds with a different instar. Hence, growth of each larval or nymphal stage can be investigated separately (Fig. 2). From a mathematical point of view, the theoretical approach is founded upon the basic equation

$$dK^n/dt = (W_i^n + W_h^n \cdot j^n) \cdot K^n, \quad (1)$$

with K, W_i, and W_h, respectively, denoting the body length of the developing insect, the average intrinsic growth rate, and the average hormone-associated growth rate. The factor j determines the extent of W_h and thus ranges from 0 to 1. The factor n indicates a specific larval or nymphal stage. Mathematical solution of equation (1) results in the expression

$$K^n(t) = K_0^n \cdot \exp[(W_i^n + W_h^n \cdot j^n) \cdot t], \quad (2)$$

where K_0^n describes the initial body length of the nth larval or nymphal stage. Average growth occurring during a specific developmental stage can be expressed by the rather simple formula

$$W_i^n + W_h^n \cdot j^n = [\ln(K_E^n) - \ln(K_0^n)]/L^n, \quad (3)$$

with K_E^n and L^n, respectively, denoting the final body length and the temporal duration of the nth larval or nymphal stage. The factor j^n indicating the share of of hormonal growth in total size increase of the insect follows the equation

$$j^n = j_{min}^n - [(D^n \cdot D^n - D^n \cdot L^n) / (L^n \cdot L^n /4)] \cdot z^n, \quad (4)$$

where j_{min} denotes the minimal value of j, whereas the factor z constitutes the range of j. The variable D represents a specific time point within the phase of larval or nymphal development.

Total insect body length (K^{tot}) may be evaluated by using the final expression

$$K^{tot} = K_0^1 \cdot \exp[(W_i^1 + W_h^1 \cdot j^1) \cdot L^1] + \{K_0^2 \cdot \exp[(W_i^2 + W_h^2 \cdot j^2) \cdot L^2] - K_0^2\} + ... + \{K_0^m \cdot \exp[(W_i^m + W_h^m \cdot j^m) \cdot L^m] - K_0^m\}. \quad (5)$$

In equation (5), L^1 - L^m denote the time spans of single larval or nymphal stages, whilst m represents the number of instars occurring during larvogenesis.

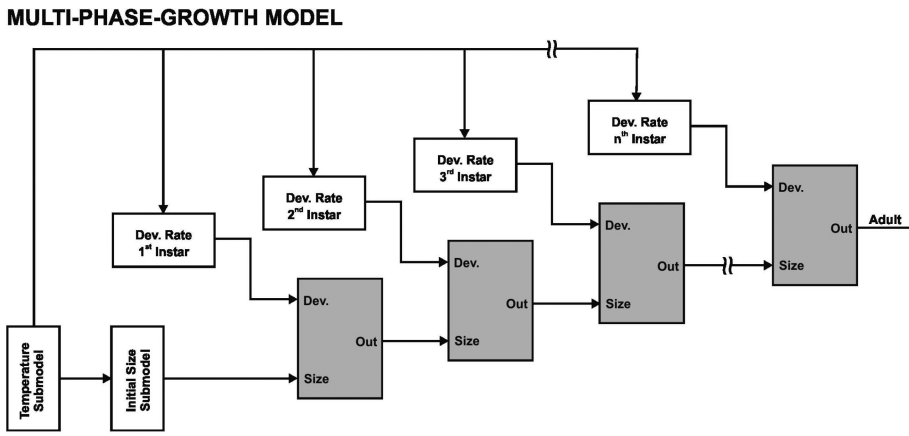

Fig. 2: Scheme depicting the multi-compartment model with its different parts. Number of compartments depends on the amount of developmental stages during larvogenesis.

Experimental studies

Nymphal growth of *Teleogryllus commodus* was investigated for environmental temperatures of 23°C, 27°C, and 30°C, respectively. Rearing of the insects was carried out under standard conditions (photoperiod: 12 h, relative humidity: 60%) in a specifically equipped climate chamber at the former Institute of Zoology, University of Salzburg (STURM 1999, 2002b, 2002c, 2003a, 2003b, 2008a, 2008b, 2011, 2012, 2014, 2016a, 2016b, 2017, STURM & POHLHAMMER 2000). Small nymphal stages (3rd and 4th instar) were kept in small plastic boxes covered with a fine net, whereas larger stages (5th instar and older) were transferred into larger plastic boxes (50 x 30 x 20 cm) filled with a 3 cm thick layer of peat soil. The boxes were equipped with egg cartons providing shelter for the animals. Nutriment of the crickets included fresh lettuce, porridge oats, standard diet for laboratory animals (Altromin 1222), and water.

For an appropriate measurement and statistical evaluation of nymphal body length each larval generation was marked with a color code. Daily analysis of body length was carried out by selecting 5 individuals of each generation. The animals were anaesthetized in a CO_2 stream and measured from the forehead to the very end of the abdomen by using a slide caliper (accuracy: 0.1 mm). Antennae as well as appendices of the abdomen were intentionally excluded from the measurement.

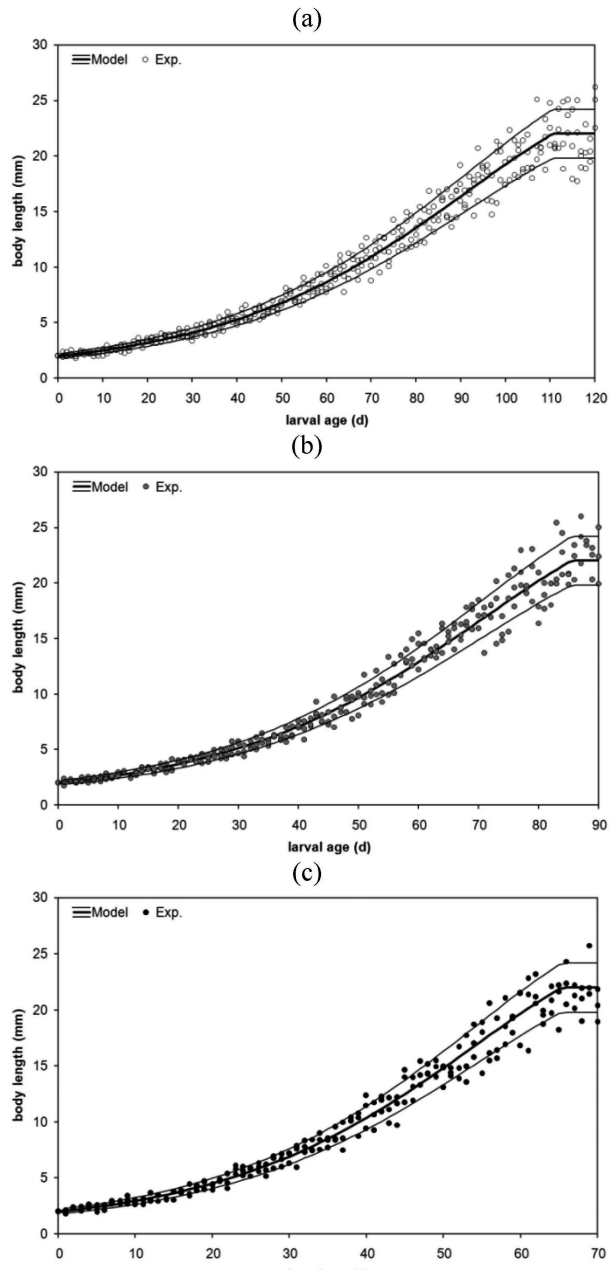

Fig. 3: Comparison of theoretical and experimental temperature-development data of the black field cricket *Teleogryllus commodus*: (a) 23°C, (b) 27°C, (c) 30°C.

Results

Time-dependent growth data obtained from theoretical simulations and related experiments are summarized in Fig. 3. In the laboratory studies nymphal development of *Teleogryllus commodus* was investigated for constant environmental temperatures of 23°C, 27°C, and 30°C, respectively, whereas other external factors were kept constant (photoperiod: 12 h, relative humidity: 60%). Independent of the experimental line animals were supplied with standard nutriment (see previous section). In addition, a constant number of crickets was reared in the plastic boxes in order to minimize any side effects raised by intraspecific competition.

As can be recognized from the single graphs depicted in Fig. 3, experiments conclude a reduction of the duration of nymphal development by more than 40%, when environmental temperature is increased from 23°C to 30°C. Based on the high number of data points plotted in the diagrams and subsequent regressive analyses average nymphal growth rate can be quantified with 0.2 mm/d at 23°C but with 0.39 mm/d at 30°C. This corresponds to an enhancement of the growth rate by nearly 100%. Nymphal growth behaviour predicted by the multi-compartment model is characterized by slightly sigmoidal characteristic of the respective functions. This phenomenon, however, indicates slower growth of the insects at the beginning and the end of larvogenesis but faster growth at intermediate stages. Correspondence between theoretical predictions and results obtained from the laboratory may be evaluated as partly excellent. Depending on the environmental temperature, numerical discrepancies between model and experiment are on the order of a few percent. This circumstance results in Pearson's correlation coefficients (r) amounting to 0.98 (23°C), 0.99 (27°C), and 0.99 (30°C).

Discussion and Conclusions

Larval and nymphal development of holometabolous and hemimetabolous insects is commonly characterized by the circumstance that a differentiation between intrinsic and hormonal growth can be made (BRYANT 1984, NIJHOUT & AMLEN 1998, CONLON & RAFF 1999, STERN 2003). Among insects with incomplete development nymphal growth never abandons completely as a consequence of deficiency or deprivation of nutrients, but its velocity may undergo a considerable cut-back (STERN 2003, STURM 2016a, 2016b). Previous studies could clearly demonstrate that hormonal growth control nay be subject to temporary fluctuations (DAMOS & SAVOPOULOU-SOULTANI 2008, 2012, STURM, 2016), so that application of a variable parameter j introduced above seems to be highly plausible. Variation of this parameter with time allows to trace nymphal development of Orthoptera in the best way (STURM 2016a, 2016b).

In the case of the Australian field cricket correspondence between theoretical and experimental growth data may be evaluated as excellent for the most part. This impression is further underlined by the circumstance that theoretical approach and experiment are responsive to eventual changes of the environmental temperature in a very similar fashion. For both research accesses any enhancement of temperature is associated with a gain of nymphal growth velocity. In contrast to previous approaches outlined by STURM (2002a, 2003a), the current model also considers a deceleration of nymphal growth after exceeding of an upper threshold temperature, thereby underlining its non-linearity. This

temperature exerting a negative effect on physiological processes is commonly situated between 34°C and 38°C (BEHRENS et al. 1983, HOFFMANN 1985, GEWECKE 1995, STURM 2002a, 2016a).

The theoretical model presented in this contribution may be categorized as a mixture of empirical and biophysical approach, thereby largely considering non-linearity between environmental control factors and nymphal development. The biophysical aspect was realized by describing nymphal growth by means of intrinsic and hormonal growth rates. At this stage of model formulation temperature dependence of these growth rates was expressed by application of simple exponential equations (STURM 2016a, 2016b), whereas related concepts of VAN'T HOFF and ARRHENIUS were not implemented yet. A main reason for this simplification is represented by the circumstance that experimental data describing exactly the enzymatic processes in cricket nymphs are characterized by very limited availability hitherto. In addition, hormonal processes controlling the development within specific nymphal stages are not fully understood. Finally, establishment of a complex biophysical approach is not mandatory for answering specific questions of insect growth in a sufficient manner.

From the content presented in this work it may be concluded that the nymphal growth model partly provides excellent results on the one side, but on the other side has to be understood as initial step with regard to the theoretical description of Orthopteran development.

Zusammenfassung

Theoretische und experimentelle Studie zum nymphalen Wachstum der australischen Feldgrille (Insecta: Orthoptera). – Der vorliegende Beitrag setzt sich mit einem Multikompartimentmodell auseinander, welches zur Simulation des nymphalen Wachstums von hemimetabolen Insekten befähigt. Generell lässt sich eine hormonelle Wachstumsrate (W_h) von einer intrinsischen (W_i) unterscheiden, wobei der zweite Faktor die Zunahme der nymphalen Größe aufgrund der Aufnahme von Nahrung inkludiert. Neben dieser grundsätzlichen Annahme berücksichtigt die theoretische Näherung auch den möglichen Einfluss von externen Faktoren (Umgebungstemperatur, Nahrungsangebot, Tag-Nacht-Zyklus, intraspezifische Konkurrenz) auf das Insektenwachstum. Anwendung und Validierung des Modells fanden für *Teleogryllus commodus* WALKER 1869 statt, da bei dieser Spezies geeignete experimentelle Daten zur Nymphenentwicklung verfügbar sind. Vorläufige Modellergebnisse stimmen sehr gut mit vergleichbaren experimentellen Resultaten überein (r: 0,97-0,99). Grundsätzlich kann eine signifikante Abhängigkeit des nymphalen Wachstums von der Umgebungstemperatur festgestellt werden.

References

ARRHENIUS S. (1889): Über die Reactionsgeschwindigkeit bei der Inversion von Rohrzucker durch Säuren. — Zeitschr. Physikal. Chemie **4**: 226-692.

BAKKER K. (1959): Feeding period, growth, and pupation in larvae of *Drosophila melanogaster*. — Entomol. Exp. Appl. **2**: 171-186.

BEHRENS W., HOFFMANN K.H., KEMPA S., GÄßLER S. & G. MERKEL-WALLNER (1983): Effects of diurnal thermoperiods and quickly oscillating temperatures on the development and reproduction of crickets, *Gryllus bimaculatus*. — Oecologia **59**: 279-287.

BRYANT P.J. (1984): Intrinsic and extrinsic control of growth in developing organs. — Quatern. Rev. Biol. **59**: 387-415.

CHAPMAN R.F. (1998): The Insects. Structure and Function. — 788 pp., Cambridge (Cambridge University Press).

CONLON I. & M. RAFF (1999): Size control in animal development. — Cell **96** (1): 235-244.

DAMOS P.T. & M. SAVOPOULOU-SOULTANI (2008): Temperature dependent bionomics and modeling of *Anarsia lineatella* (Lepidoptera: Gelechiidae) in the laboratory. — J. Econ. Entomol. **101** (5): 1557-1567.

DAMOS P.T. & M. SAVOPOULOU-SOULTANI (2012): Temperature-driven models for insect development and vital thermal requirements. — Psyche **2012**: 1-13.

GEWECKE M. (ed.) (1995): Physiologie der Insekten. — 445 pp., Stuttgart, Jena, New York (Gustav Fischer).

HALDANE J.B. S. (1927): On Being the Right Size. — 14 pp., Cambridge (Cambridge University Press).

HILBERTAND D.W. & J.A. LOGAN (1983): Empirical model of nymphal development for the migratory grasshopper, *Melanoplus saguinipes* (Orthoptera: Acrididae). — Environ. Entomol. **12**: 1-5.

HOFFMANN K.H. (1985): Environmental physiology and biochemistry of insects. — 298 pp., Heidelberg (Springer-Verlag).

MERKEL G. (1977): The effects of temperature and food quality on the development of *Gryllus bimaculatus* (Orthoptera, Gryllidae). — Oecologia **30**: 129-140.

NIJHOUT H.F. & D.J. EMLEN (1998): Competition among body parts in the development and evolution of insect morphology. — Proc. Nat. Acad. Sci. USA **95**: 3685-3689.

NIJHOUT H.F., DAVIDOWITZ G. & D.A. ROFF (2006): A quantitative analysis of the mechanism that controls body size in *Manduca sexta*. — J. Biol. **5**: 1-16.

SHINGLETON A.W., FRANKINO W.A., FLATT T., NIJHOUT H.F. & D.J. EMLEN (2007): Size and shape: the developmental regulation of static allometry in insects. — BioEssays **29**: 536-548.

SHINGLETON A.W., MIRTH C.K. & P.W. BATES (2008): Developmental model of static allometry in holometabolous insects. — Proc. Royal Soc. B, Biol. Sci. **275**: 1875-1885.

STERN D. (2003): Body-Size Control: How an Insect Knows It has Grown Enough. — Curr. Biol. **13**: R267-R269.

STURM R. (1999): Einfluß der Temperatur auf die Eibildung und Entwicklung von *Acheta domesticus* (L.) (Insecta: Orthoptera: Gryllidae). — Linzer biol. Beitr. **31** (2): 731-737.

STURM R. (2002a): Einfluss der Temperatur auf die Embryonal- und Larvalentwicklung bei verschiedenen Grillenarten (Insecta: Orthoptera). — Linzer biol. Beitr. **34** (1): 485-502.

STURM R. (2002b): Development of the accessory glands in the genital tract of female *Teleogryllus commodus* WALKER (Insecta, Orthoptera). — Arthrop. Struc. Dev. **31**: 231-241.

STURM R. (2002c): Morphology and ultrastructure of the female accessory sex glands in various crickets (Orthoptera, Saltatoria, Gryllidae). — Deutsche Entomol. Z. **49**: 185-195.

STURM R. (2003a): Längen- und Gewichtsentwicklung der Larven verschiedener Grillenarten (Orthoptera: Gryllidae) vom Zeitpunkt des Ausschlüpfens bis zur Adulthäutung. — Linzer biol. Beitr. **35(1)**: 487-498.

STURM R. (2003b). The spermatophore of the black field cricket *Teleogryllus commodus* (Insecta: Orthoptera: Gryllidae): size, structure and formation. — Entomol. Abh. **61**: 227-332.

STURM R. (2008a): Eiproduktion und Oviposition bei der australischen Feldgrille *Teleogryllus commodus* WALKER, 1869: Experimentelle Ergebnisse und Modellrechnungen (Orthoptera: Ensifera, Gryllidae). — EZ **118**: 41-45.

STURM R. (2008b): Morphology and histology of the ductus receptaculi and accessory glands in the reproductive tract of the female cricket, *Teleogryllus commodus*. — J. Insect Sci. **8**: 1-11.

STURM R. (2011): The effect of remating on sperm number in the spermatophores of *Teleogryllus commodus* (Gryllidae). — Inv. Biol. **130**: 362-367.

STURM R. (2012): Morphology and ultrastructure of the accessory glands in the female genital tract of the house cricket, *Acheta domesticus*. — J. Insect Sci. **12**: 1-11.

STURM R. (2014): Comparison of sperm number, spermatophore size, and body size in four cricket species. — J. Orthop. Res. **23**: 39-47.

STURM R. (2016a): Computer models in Entomology: Predicting the daily fecundity of female *Acheta domesticus*. — Comp. Math. Biol. **5**: 3.

STURM R. (2016b): Mathematische Modelle in der Biologie – Das Wachstum von Insekten theoretisch betrachtet. — NR **69**: 293-297.

STURM R. (2017): Dependence of daily oviposition activity and total fecundity on body mass in the house cricket *Acheta domesticus* (L.) (Insecta: Orthoptera). — Linzer biol. Beitr. **49 (1)**: 961-969.

STURM R. & K. POHLHAMMER (2000): Morphology and development of the female accessory sex glands in the cricket *Teleogryllus commodus* (Saltatoria: Ensifera: Gryllidae). — Inv. Reprod. Dev. **38**: 13-21.

VAN DER HAVE T.M. (2008): Slaves to the Eyring equation?: Temperature dependence of life-history characters in developing ectotherms. — Ph.D. thesis, Department of Environmental Sciences, Resource Ecology Group, Wageningen University.

VAN'T HOFF J.H. (1901). Osmotic pressure and chemical equilibrium. — Nobel Lecture, December 1901.

WAGNER T.L., WU H.I., SHARPE P.J.H., SCHOOLFIELD R.M. & R.N. COULSON (1984): Modeling insect development rates: a literature review and application of a biophysical model. — Ann. Entomol. Soc. Am. **77**: 208-225.

WEBER H. & H. WEIDNER (1974): Grundriss der Insektenkunde. — 640 pp., Stuttgart (Gustav Fischer).

Anschrift des Verfassers: MMMMMMag. Dr. Robert STURM
Brunnleitenweg 41
5061 Elsbethen, Austria
E-mail: sturm_rob@hotmail.com

ZOBODAT - www.zobodat.at

Zoologisch-Botanische Datenbank/Zoological-Botanical Database

Digitale Literatur/Digital Literature

Zeitschrift/Journal: Linzer biologische Beiträge

Jahr/Year: 2018

Band/Volume: 0050_1

Autor(en)/Author(s): Sturm Robert

Artikel/Article: Theoretical and experimental study on the nymphal growth of the Australian field cricket (Insecta: Orthoptera) 855-863