Tuexenia 35: 85–130. Göttingen 2015.
doi: 10.14471/2015.35.016, available online at www.tuexenia.de

Formalized classification and nomenclatural revision of thermophilous deciduous forests (*Quercetalia pubescentis*) of Bosnia and Herzegovina

Formalisierte Klassifikation und nomenklatorische Revision thermophiler Laubwälder (*Quercetalia pubescentis*) in Bosnien und Herzegowina

Vladimir Stupar[1, *], Đorđije Milanović[1], Jugoslav Brujić[1] & Andraž Čarni[2, 3]

[1]*University of Banjaluka, Forestry faculty, Department of forest ecology, S.Stepanovića 75a, 78000 Banjaluka, Bosnia and Herzegovina, vladimir.stupar@sfbl.org; djordjije.milanovic@sfbl.org; jugoslav.brujic@sfbl.org*
[2] *Institute of Biology, Research Centre of the Slovenian Academy of Sciences and Arts, Novi trg 2, 1000 Ljubljana, Slovenia; carni@zrc-sazu.si;*
[3]*University of Nova Gorica, Vipavska 13, 5000 Nova Gorica, Slovenia*
**Corresponding author*

Abstract

Thermophilous deciduous forests of *Quercetalia pubescentis* are widespread in Bosnia and Herzegovina (B&H), where they occupy about 11% of the national territory and account for about 20% of the total forest area. This paper provides their formalized classification and nomenclatural revision, based on 274 relevés from the literature and 399 relevés collected during intensive field research. The Cocktail method was used for supervised classification, which resulted in 17 associations recognized for B&H. Additionally, one new association emerged after semi-supervised classification of relevés not classified by Cocktail. The following associations were recognized, and characterized by species composition, ecology and distribution: 1. *Querco pubescenti-Carpinetum orientalis*; 2. *Rusco aculeati-Carpinetum orientalis*; 3. *Carici hallerianae-Quercetum pubescentis*; 4. *Cruciato glabrae-Carpinetum orientalis*; 5. *Seslerio autumnalis-Quercetum pubescentis*; 6. *Aristolochio luteae-Quercetum pubescentis*; 7. *Asparago tenuifolii-Quercetum pubescentis*; 8. *Seslerio autumnalis-Ostryetum carpinifoliae*; 9. *Rusco aculeati-Ostryetum carpinifoliae*; 10. *Querco pubescenti-Ostryetum carpinifoliae*; 11. *Quercetum frainetto-cerridis*; 12. *Fraxino orni-Quercetum cerridis*; 13. *Lathyro nigri-Quercetum petraeae*; 14. *Aceri obtusati-Quercetum petraeae*; 15. *Cytiso hirsuti-Quercetum petraeae*; 16. *Festuco drymejae-Quercetum petraeae*; 17. *Potentillo micranthae-Quercetum petraeae*; 18. *Seslerio autumnalis-Quercetum petraeae*. The validity and legitimacy of associations were checked and they were validated and corrected as needed, strictly following the rules of the International Code of Phytosociological Nomenclature. A complete list of synonyms has been given for every association, with an indication of the article of the Code according to which the name must be rejected. The associations were assembled into four groups, following the criterion of dominant species in a tree layer, in order to present differences and similarities in floristic composition between associations of the same type, i.e., dominated by the same tree species. An ecogram was drawn displaying the relative ecological range of each association along soil pH and moisture gradients. The largest number of associations (13) occurs in the Mediterranean region; the Dinaric and Pre-Pannonian regions each harbour ten associations, while there are only five associations in the Transitional Illyrian-Moesian region. Seven syntaxa previously reported for thermophilous deciduous forests of B&H were not recognized during the analysis. A list is given of all *nomina nuda* that could not be resolved and ascribed to synonymy with accepted associations.

Manuscript received 28 February 2015, accepted 22 June 2015
Co-ordinating Editor: Erwin Bergmeier

Keywords: Cocktail method, forest vegetation, International Code of Phytosociological Nomenclature, oak forests, phytosociology, syntaxonomy

Erweiterte deutsche Zusammenfassung am Ende des Artikels

1. Introduction

Thermophilous deciduous forests of the order *Quercetalia pubescentis* (*Querco-Fagetea*) occupy about one fifth of the forest area of Bosnia and Herzegovina (B&H) (STEFANOVIĆ et al. 1983). In southern B&H, they are represented by zonal communities dominated by *Quercus pubescens* and *Carpinus orientalis* (STEFANOVIĆ et al. 1977b). Similar communities are developed extrazonally in other parts of the country, mainly along river canyons (FUKAREK 1975, STEFANOVIĆ 1979a, 1989). *Ostrya carpinifolia* takes a dominant role at higher altitudes in southern B&H, in moister and cooler limestone canyons in central B&H and on steep southern exposure limestone and dolomite outcrops of central and northern B&H (FABIJANIĆ et al. 1967, STEFANOVIĆ 1979a, LAKUŠIĆ et al. 1982b). Azonal *Quercus cerris* forests are the main type of forest vegetation in dry karst fields of western and southern parts of the country (STEFANOVIĆ 1968), while *Quercus frainetto* is the main species in zonal forest vegetation in eastern B&H in the zone of biogeographical and climatic transition towards the dryer Central Balkans (FUKAREK et al. 1974, HORVAT et al. 1974, STEFANOVIĆ 1988). Acido-thermophilous *Quercus petraea* forests are a particular type of thermophilous deciduous forests in B&H, which are found on warmer habitats over acidic bedrock throughout eastern, central and northern B&H.

Although phytosociological studies of the vegetation have a relatively long tradition in B&H (HORVAT 1933, 1941, HORVAT & PAWLOWSKI 1939, TREGUBOV 1941), there are clearly many problems related to the classification and nomenclature of thermophilous deciduous forests (LAKUŠIĆ et al. 1982b, REDŽIĆ 2007, 2011). These problems can mainly be related to the large diversity of this vegetation type and poor coverage by phytosociological relevés (only 274 have been published for the whole country). Research in the past was mainly restricted to canyon systems and *Carpinus orientalis* scrub (LAKUŠIĆ et al. 1987, LAKUŠIĆ & REDŽIĆ 1989, 1991, STEFANOVIĆ 1989, MURATSPAHIĆ et al. 1991) (Fig. 1). Studies of other types were conducted at a limited number of localities, resulting with only a modest number of relevés (FABIJANIĆ et al. 1963, STEFANOVIĆ 1964b, 1968, FUKAREK et al. 1974, BUCALO 1999, REDŽIĆ & BARUDANOVIĆ 2010, BRUJIĆ 2013), while some types were not recorded at all. Additionally, the nomenclature is far from being settled. Original literature is overcrowded with pseudonyms, invalidly published names, new names for already validly published syntaxa and a plethora of *nomina nuda*. Some syntaxa from neigbouring regions have been uncritically included in B&H syntaxonomical overviews. This can be illustrated by the fact that in the first overview of this type of vegetation in B&H, the number of different associations was 14 (LAKUŠIĆ et al. 1978), while in the last, in which the author listed all names that occurred in published or unpublished sources, the number of associations was 44 (REDŽIĆ 2011). Finally, there is a problem with the syntaxonomical position of acido-thermophilous *Quercus petraea* forests. These forests are easily distinguished from acido-mesophilous *Quercion roboris* by the number of thermophilous and xerophilous species and the absence of strong acidophytes. While such forests in Serbia were classified into *Quercetalia pubescentis* (JOVANOVIĆ et al. 1986, TOMIĆ et al. 2006, TOMIĆ & RAKONJAC 2013), in B&H and Croatia they have mainly been treated as part of *Quercion roboris* (STEFANOVIĆ et al. 1977a, STEFANOVIĆ 1984, VUKELIĆ 2012). However, bearing in mind their ecological

and floristical features and knowing that such misclassifications have also been reported for Central Europe (CHYTRÝ 1997, KASPROWICZ 2010, INDREICA 2012), we included them in thermophilous deciduous forests.

There are several national classifications of thermophilous deciduous forests in neighbouring regions made using the traditional expert method (SARIĆ 1997, ŠKORIĆ 2006, BERGMEIER & DIMOPOULOS 2008, KEVEY 2008, VUKELIĆ 2012). A formalized classification method (i.e., the Cocktail method) was used for classification of thermophilous deciduous forests in the Czech Republic (ROLEČEK 2007, CHYTRÝ 2013), and is used increasingly for classification of other vegetation types on the national level (KOČÍ et al. 2003, ŠILC & ČARNI 2007, CHYTRÝ 2013, RODRÍGUEZ-ROJO et al. 2014). This method appears to be the most suitable for producing a stable and formally defined classification system for the vegetation of large areas (CHYTRÝ 2007). Although it has been tested and applied mainly on large national data sets that, beside relevés of analyzed vegetation types, consist of relevés of all other vegetation types of the research area (typically a national territory), some works have been published that demonstrate its usability on data sets consisting of only one vegetation type, e.g., mesic grasslands (RODRÍGUEZ-ROJO et al. 2014).

The aim of this work was to fill the gap in available data about thermophilous deciduous forests in the B&H by intensive field research, to formally classify thermophilous deciduous forests in B&H, to check the validity and legitimacy of the existing nomenclature and to correct and typify syntaxa according to the ICPN (International Code of Phytosociological Nomenclature).

2. Study area

Bosnia and Herzegovina is located in south-eastern Europe, in the western Balkan Peninsula. Biogeographically, it is divided into four regions (STEFANOVIĆ et al. 1983) (Fig. 1): Pre-Pannonian (continental, northern B&H), Dinaric (mountainous, central B&H), Mediterranean (southern and south-western B&H), and Transitional Illyrian-Moesian (eastern B&H). Northern B&H embraces the southern outcrops of the Pannonian Plain and the northern foothills of the Dinaric Alps and is an area of predominantly low mountains, hills and the alluvial plains of the Sava River and lower reaches of the rivers Una, Vrbas, Bosna and Drina. Dominant forest vegetation is represented by meso-neutrophilous forests of beech (*Fagus sylvatica*), common hornbeam (*Carpinus betulus*) and sessile oak (*Quercus petraea*). The major part of the central (Dinaric) region is mountainous, with the high Dinaric Alps spreading in a NW-SE direction. Forest vegetation is for the most part represented by mesic forests of beech, fir (*Abies alba*) and spruce (*Picea abies*). Deep limestone river canyons and valleys, which generally have a north-south direction, are a prominent feature of this mountainous region. The southern, Mediterranean part of the country is highly influenced by the Mediterranean climate and mainly belongs to the sub-Mediterranean zone, while the Eu-Mediterranean zone occupies only a narrow belt around the short Adriatic coastline. This part of the country consists of limestone mountains and hills intersected by numerous karstic fields (Livanjsko polje, Duvanjsko polje, Posuško polje, Mostarsko blato, Popovo polje, Nevesinjsko polje, Gatačko polje, Dabarsko polje etc.) with the large alluvial plain of the Mediterranean River Neretva in the south. Zonal vegetation of this region is represented by downy oak/oriental hornbeam (*Quercus pubescens*, *Carpinus orientalis*) forests. The eastern, Transitional Illyrian-Moesian biogeographical region comprises a relatively narrow belt along the River Drina at the border with Serbia. It is a biogeographical and climatic transi-

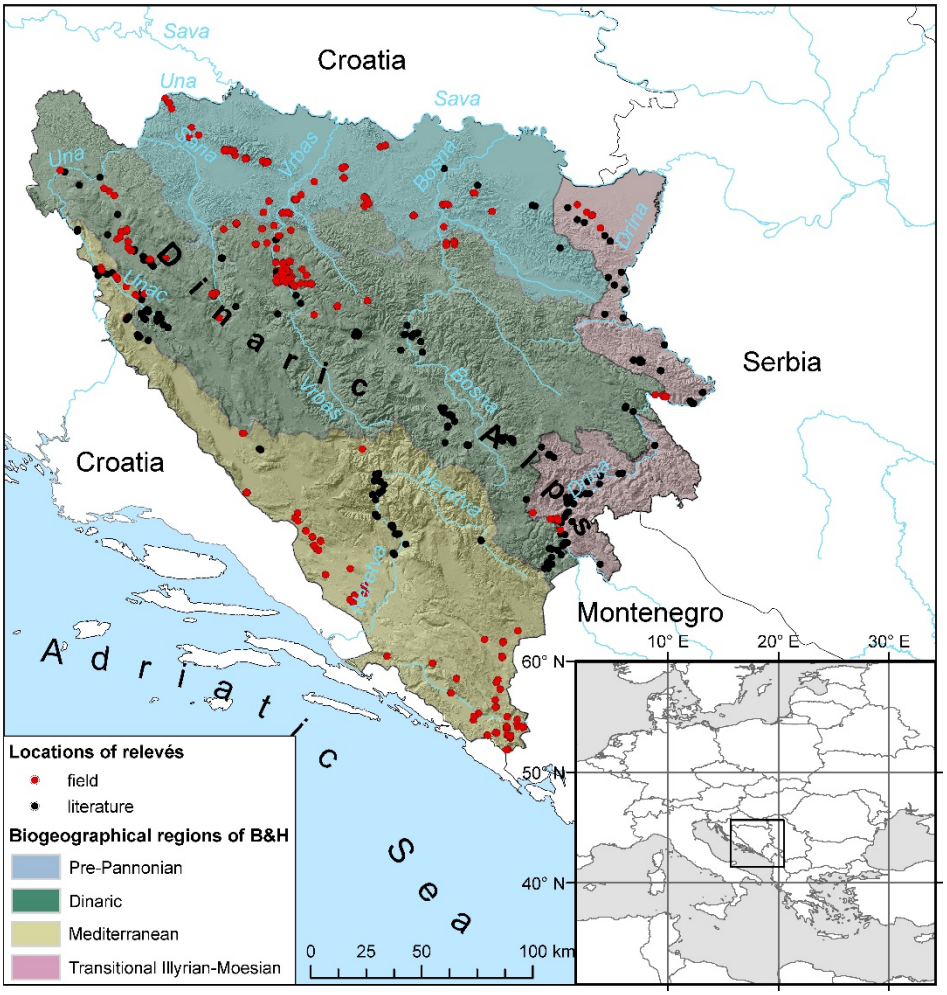

Fig. 1. Location of the study area. The biogeographical division of B&H is indicated. Dots represent localities of 673 relevés used in this study (black - literature, red - field research).

Abb. 1. Lage des Untersuchungsgebiets mit der biogeographischen Gliederung von B&H. Punkte geben die Orte der 673 Vegetationsaufnahmen dieser Studie an (schwarz – Literatur, rot: eigene Feldarbeit).

tion between the western more humid Illyrian zone and the eastern, dryer Central Balkans. The zonal community is Central Balkans hungarian oak/turkey oak (*Quercus frainetto*, *Q. cerris*) forest. Carbonate bedrock (limestone and dolomite) predominates in the southern and western parts of the country, while the northern and eastern parts are composed of carbonate, siliceous and ultramafic rocks (VELIĆ & VELIĆ 1983). The climate is also very diverse, since two major climatic zones overlap here: central European from the north and Mediterranean from the south. The transitional zone is highly modified by the influence of mountain massifs (DELIJANIĆ et al. 1964). River valleys and canyons, with their south-north direction, play a significant role in this climate modification, since, through them, the Mediterranean climate penetrates deep into the central and northern parts of the country. This part

of Europe has been under intensive anthropogenic influence since the Early Neolithic, especially the Submediterranean and Pannonian regions. Large portions of this land were altered, mainly deforested, quite early because of the spread of agriculture (HORVAT et al. 1974). Bearing in mind this great diversity of abiotic features in B&H, it is not surprising that it harbors great diversity of vascular plants, with a large number of endemics (LUBARDA et al. 2014) and, consequently, great diversity of vegetation types (LAKUŠIĆ et al. 1978, JOVANOVIĆ et al. 1986, REDŽIĆ 2007). Forests cover around 54% of the country's area and thermophilous deciduous forests occupy ca. 5800 km^2, which is around 11% of the country's territory (STEFANOVIĆ et al. 1983).

3. Methods

3.1 Collection and sampling of data

All relevés used in this study are stored in, and available from, the Oak Forests Vegetation Database of Bosnia and Herzegovina, with the ID EU-BA-001 in the Global Index of Vegetation-Plot Databases (DENGLER et al. 2011). This database consists of all 1,195 published and available unpublished relevés of oak-dominated forests in B&H. All relevés assigned by their authors to *Quercetalia pubescentis*, as well as those of acido-thermophilous *Quercus petraea* forests, were selected for the analysis. Four relevés of pure *Castanea sativa* woods from the sub-Mediterranean region of B&H, designated *Castanetum sativae hercegovinum* (WRABER 1958), were omitted. Although this association has been classified by some authors within *Quercetalia pubescentis* (LAKUŠIĆ et al. 1978, REDŽIĆ 2011), after inspection of those relevés, it was determined that they are floristically very close to continental acidophilous *Castanea sativa* forests. In addition to the relevés collected from the literature, 399 relevés were collected in the field by the authors, in different types of thermophilous deciduous forests, mainly in areas that had previously been overall very poorly sampled. All relevés were made using the standard Central European phytosociological method (BRAUN-BLANQUET 1964) with Braun-Blanquet scale cover-abundance estimates of each species. The size of most relevé plots was 225–400 m^2. The minimum distance between relevé plots was 100 m. The minimum canopy cover was 50%, although for the majority it was 70% and higher. Only relevés of stands with more than 5 m in height were considered. Relevés from the literature were taken into consideration only when they could be georeferenced relatively precisely, and when they contained complete species records. A total of 673 relevés was collected and entered into the Turboveg database (HENNEKENS & SCHAMINÉE 2001). The relevés covered most of the territory of B&H in wich thermophilous deciduous forests occur (see Fig. 1 for their geographical distribution). Some larger gaps occur in areas that are mine contaminated (mainly the central parts of the Dinaric and Mediterranean regions). Relevés from the literature, due to the mainly local character of older vegetation studies, were clustered over a few localities: river canyons (mid-stream Neretva River (MURATSPAHIĆ et al. 1991), upper-stream Drina River (STEFANOVIĆ 1964a, STEFANOVIĆ & MANUŠEVA 1966) mid-stream Bosna River (around Zenica) (FUKAREK et al. 1974, FUKAREK 1975), mid-stream Vrbas River) (STEFANOVIĆ 1989), Osječenica and Jadovnik Mts area in western B&H (STEFANOVIĆ 1968, BUCALO 1999), Lepenica area (FABIJANIĆ et al. 1963) and Trebević Mt in central B&H (STEFANOVIĆ 1964b) and NP "Sutjeska" in eastern B&H (FUKAREK 1970b). These nine localities account for over 90% of relevés from the literature. With field research conducted over the last several years, we tried to fill the gaps in the available data, sampling mostly in the northern and southern regions of B&H since they were totally uncovered by relevés. In northern B&H this included the areas of the mountains Crni Vrh, Kozara, Ljubić, Majevica, Motajica, Ozren, Pastirevo, Planinica and Trebava. Most relevés from southern B&H were made in the area of Popovo Polje, Orjen Mt and the large limestone plateau between Trebinje and Gacko. On the west side of the Neretva River we recorded over a large area between Ljubuški, Grude and Posušje. A considarable number of relevés was made on western B&H carbonate mountains (Čemernica, Grmeč, Manjača, Osmača, Starčevica, Šiša) that are under certain influence of the Mediterranean climate. Central parts of B&H were not sampled due to the

already mentioned mine contamination, but also because apart from river canyons, this is a region of predominantly mesic forests of beech, fir and spruce. In the overall very well covered, but also mine contaminated, region of eastern B&H we made only a few relevés in order to test some established concepts and revise some doubtful taxonomic identifications. We also tried to collect at least 10 relevés from every type, over as large area as possible.

Since many authors did not record mosses, we excluded them from the data set before numerical analysis. Taxa recorded for more than one layer were merged into a single layer to take account of inconsistent sampling. Records of species determined to the genus level were deleted. Plant nomenclature followed Flora Europaea (TUTIN et al. 1968–1993). Species not included in this reference but mentioned in this paper have been listed in the Supplement E1. Species from taxonomically critical groups that were not always recognized by the relevé authors were combined into aggregates (agg.) and species that included several subspecies that were not always recorded or recognized by authors were combined under the abbreviation 's.l.' (*sensu lato*) and also listed in the Supplement E1. *Aristolochia pallida* has been considered to be *A. lutea* (NARDI 1984) and *Teucrium polium* to be *T. polium* subsp. *capitatum* (HADŽIABLAHOVIĆ 2010). The dubious taxon *Quercus dalechampii* was treated as part of *Quercus petraea* agg. following DI PIETRO et al. (2012). Woody species recorded for more than one layer were merged into one layer. Taxa occurring in three or fewer relevés were omitted from the analysis in order to reduce noise (TSIRIPIDIS et al. 2007).

3.2 Classification

Formalized classification of thermophilous deciduous forests in B&H was performed using the Cocktail method (BRUELHEIDE 2000). This supervised classification method using sociological species groups for the construction of formal definitions was applied in JUICE software (TICHÝ 2002) to the original set of all 673 relevés, because we were unable to perform stratified resampling of the original data.

We tried to perform geographical stratification but, since the majority of relevés from the literature were clustered over nine localities, the stratification resulted in a fairly small number of relevés resampled. In addition, since the majority of relevés were not assigned to a specific association, geographical stratification often completely discarded some types, especially those with a smaller number of relevés. Finally, we decided that stratification based on unsupervised classification methods applied prior to the supervised classification would not be appropriate. The methods we used to create sociological groups and formal definitions followed KOČÍ et al. (2003). Sociological groups are groups of species that tend to occur together in relevés of a large database. If a database covers a broad spectrum of different habitats and a large geographical area, the species groups obtained are of more general validity. In our case, since the database only covers one vegetation type, i.e., thermophilous deciduous forests, the validity of species groups is restricted to thermophilous deciduous forests of B&H. We started the extraction of each group by preselecting one species. After selecting a starting species, we calculated the phi coefficient (CHYTRÝ et al. 2002) of the association between each species in the data set and the group of relevés that contained the starting species. Of the species not belonging to the species group, we usually chose one with the highest phi value and included it in the group as its next member. In some cases, a species with second or third highest phi value was included as the next member, particularly if the species with the highest phi value was already included in another species group or had several times more or fewer occurrences in the data set than the species already included in the species group. After including the new species in the species group, the group of relevés was redefined, and the phi coefficient for all species in the data set and the new group of relevés was recalculated. If the species group disintegrated after this step, i.e. some of the species not included in the species group had a higher phi value than some of the species included, the group was rejected. If the species belonging to the group had the highest phi values, the group was either accepted or further optimized by including additional species. The optimization process was stopped if any of the candidate species for addition in the next step either caused group disintegration or substantially changed the ecological coherence of the group, or if the number of species in the group reached its maximum (we set it at four). Following ROLEČEK (2007), this rather low number of species was used to receive groups that are ecologically

homogenous. We thus made 22 species groups, which, together with expert knowledge and the traditional circumscriptions of target associations, were used for the creation of the formal definitions. Formal definitions are a set of rules that a particular relevé should fulfil to enter the scope of a particular association defined by that formal definition. They are basically combinations of occurrences of sociological species groups and single species dominance values connected by the logical operators AND, OR and NOT. If the relevé contained at least half of the species from the group, the group was considered to be contained in a relevé. After several trials and errors, we finally managed to produce 17 formal definitions of traditionally accepted target associations using only 18 out of the initial 22 sociological species groups (Table 1). After formulating all the definitions, we attempted classification of all 673 relevés from the original dataset. Relevés that remained unclassified after Cocktail classification, or were assigned to two associations due to marginal overlapping of some Cocktail definitions, were subjected to semi-supervised classification (TICHÝ et al. 2014). We used a K-means algorithm with 17 *a priori* defined groups (all groups produced by the Cocktail method) and 18 output groups in case there was another possible unrecognized association within the group of unclassified relevés. All the relevés that were classified by the semi-supervised classification were taken into account for the random selection of the initial centroids of each *a priori* defined vegetation type (five relevés to define the starting centroids and 20 algorithm starts for each type). The Cocktail definition for the new association that emerged after semi-supervised classification was made *a posteriori*.

Our decision to accept 18 associations is mainly based on our expert judgement and could undoubtedly be argued. The concept of an association in the Central European phytosociological school has changed over time, from relatively large and broadly defined associations to more narrow units that were able to provide a more suitable description of the many variations in habitat and geographic locations (MUELLER-DOMBOIS & ELLENBERG 1974). One possible way of classifying our relevés could have been lumping into eight to ten broader groups, which would be interpretable using large-scale ecological (macroclimatic) parameters. However, in that way we would lose a lot of information that differentiates communities on a more local scale (topographical and geological patterns, management type etc.), which are very useful on a national scale, e.g., in forest management or nature conservation. On the other hand, we could have continued splitting some of the vegetation units, using their local peculiarities (often of a methodological origin) but, at this level of knowledge and available data, it would probably have led us to associations (or sub-associations) that are poorly defined and hard to interpret, making them useless in a broader scope. Following BERGMEIER & DIMOPOULOS (2001), we made what we believe to be a well-founded compromise that provides manageable units for national and supra-national surveys. Additionally, we tried not to create more confusion in an already tangled situation in the syntaxonomy of thermophilous deciduous forests in the region, so we made definitions of associations to be as close to the traditionally accepted vegetation concepts as possible (in B&H and neighbouring countries) (HORVAT 1938, LAKUŠIĆ et al. 1978, 1982b, LAKUŠIĆ & REDŽIĆ 1991, MURATSPAHIĆ et al. 1991, SARIĆ 1997, ŠKORIĆ 2006, TRINAJSTIĆ 2008, REDŽIĆ 2011, VUKELIĆ 2012, TOMIĆ & RAKONJAC 2013), and we disregarded only associations that could not be defined by means of their own diagnostic species or where no sociological species group or dominant species could be found to create a formal definition.

For assessment of the quality of the definition of individual associations, we used diagnostic species determined by calculating the species' fidelity measure (CHYTRÝ et al. 2002), for which we used the phi coefficient in the JUICE 7 program (TICHÝ 2002). For this purpose we classified associations into four groups. For each group, relevés that belong to the same association were compared with the remaining relevés in the group, which were taken as a single undivided group. Each association was virtually adjusted to 1/(number of associations in the group) of the size of the entire group, while holding the percentage occurrences of a species within and outside a target association the same as in the original data set (TICHÝ & CHYTRÝ 2006). We also calculated Fischer's exact test and gave a zero fidelity value to a species with $p > 0.001$. The threshold phi value for the species to be considered as diagnostic was set at 0.25.

Table 1. Sociological groups of species used for the Cocktail definitions of B&H thermophilous deciduous forests.

Tabelle 1. Für die Cocktail-Definitionen verwendete soziologische Artengruppen der thermophilen Laubwälder in B&H.

Group	Species
Group Aremonia agrimonoides	*Aremonia agrimonioides*, *Primula vulgaris*, *Sanicula europaea*
Group Asparagus acutifolius	*Asparagus acutifolius*, *Juniperus oxycedrus*, *Paliurus spina-christi*, *Ruscus aculeatus*
Group Carex pilosa	*Acer tataricum*, *Carex pilosa*, *Epimedium alpinum*, *Tilia tomentosa*
Group Chamaecytisus austriacus	*Chamaecytisus austriacus*, *Chamaespartium sagittale*, *Hieracium praealtum* subsp. *bauhinii*, *Poa nemoralis*
Group Clematis flammula	*Clematis flammula*, *Phillyrea latifolia*, *Pistacia terebinthus*, *Rubus ulmifolius*
Group Cnidium silaifolium	*Bunium alpinum* subsp. *montanum*, *Carex humilis*, *Cnidium silaifolium*, *Thymus longicaulis*
Group Cornus mas	*Buglossoides purpurocaerulea*, *Cornus mas*, *Euonymus verrucosus*, *Viburnum lantana*
Group Festuca drymeja	*Festuca drymeja*, *Galium schultesii*, *Lathyrus vernus*, *Symphytum tuberosum*
Group Galium pseudaristatum	*Physospermum cornubiense*, *Galium pseudaristatum*, *Agrimonia eupatoria*
Group Geranium robertianum	*Arabis turrita*, *Asarum europaeum*, *Asplenium trichomanes*, *Geranium robertianum*
Group Geranium sanguineum	*Betonica officinalis*, *Filipendula vulgaris*, *Geranium sanguineum*, *Trifolium alpestre*
Group Hieracium racemosum	*Cephalanthera longifolia*, *Chamaecytisus hirsutus* agg., *Hieracium racemosum*, *Silene nutans*
Group Luzula luzuloides	*Genista tinctoria*, *Hieracium murorum*, *Luzula luzuloides*, *Pteridium aquilinum*
Group Lychnis coronaria	*Aira elegantissima*, *Genista pilosa*, *Lychnis coronaria*, *Vulpia myuros*
Group Melittis melissophyllum	*Lathyrus niger*, *Melittis melissophyllum*, *Sorbus torminalis*, *Tanacetum corymbosum*
Group Prunus spinosa	*Acer campestre*, *Crataegus monogyna*, *Ligustrum vulgare*, *Prunus spinosa*
Group Teucrium chamaedrys	*Bromus erectus* agg., *Dorycnium pentaphyllum* subsp. *germanicum*, *Teucrium chamaedrys*
Group Veronica officinalis	*Avenella flexuosa*, *Hieracium pilosella*, *Hieracium sabaudum*, *Veronica officinalis*

3.3 Nomenclature of syntaxa

Syntaxonomical nomenclature, as well as descriptions of new syntaxa, strictly followed the rules of ICPN (WEBER et al. 2000). The correct name was determined for every association in their orthographically correct form according to ICPN Art. 41. The accepted names of associations that contained only the genus name(s) in the original diagnosis were supplemented with species epithets in accordance with Recommendation 10c of the Code. All synonyms older than the respective accepted name include a reference to the article and paragraph of the Code according to which the name must be rejected. This was not done in case of synonyms that were younger than the accepted names because such names were not candidates for the correct name due to the priority principle. Lists of synonyms also included frequently used pseudonyms, i.e., names of syntaxa used with the original author citation, but misinterpreted by later authors. Pseudonyms were cited with the name of the misinterpreting author, preceded by the word *sensu*, and followed by the name of the author of the original description after the word *non.* For every accepted correct name, the original name as given in the original diagnosis was provided. The dates of effective publication of syntaxa were taken from the papers in which they were validly published, regardless of possible different indications reported by the authors in the papers. Doctoral or master theses that were not available in libraries were not considered to be effective publications. Lectotypes and neotypes were chosen for syntaxa not yet typified. For invalidly published syntaxa according to Article 5, holotypes were indicated. When the name of a syntaxon was published by an author without a sufficient original diagnosis, that syntaxon was considered to be *nomen nudum*. A modified form of the name, i.e., *nomen mutatum,* was used as a replacement for a syntaxon name that was originally formed from the names of taxa not used in recent taxonomic and floristic literature, with syntaxon names that include the names of taxa that are in accordance with contemporary taxonomic literature. Diagnoses of new associations were accompanied by a description of the association and a phytosociological table with holotype indicated. Assignment of the species to syntaxonomic groups in phytosociological tables was done according to POLDINI (1989) and VUKELIĆ (2012).

Abbreviations: Art. = article of ICPN; ass. nov. = associatio nova; Bas. = basionym; nom. illeg. = nomen illegitimum; nom. ined. = nomen ineditum; nom. inval. = nomen invalidum; nom. nud. = nomen nudum; nom. superf. = nomen superfluum; nom. mut. = nomen mutatum; Orig. = original form of the valid syntaxon name; rel. = relevé; Syn. = synonym; Tab. = phytocoenological table in the publication.

4. Results

Thermophilous deciduous forests of B&H were formally classified by Cocktail definitions into 17 target associations, to which 483 relevés of the original data set were classified. Semi-supervised classification classified the remaining 190 unclassified relevés into 17 target associations, and additionally yielded one more ecologically and floristically well defined group, which was recognized as a new association, and described as *Aceri obtusati-Quercetum petraeae*. Because the primary aim of this paper was formally to classify thermophilous deciduous forests in B&H at the association level, we did not consider their assignment to alliances, which would require a broader regional survey that exceeds the scope of this study. The associations were rather grouped following the criterion of dominant species in a tree layer, in order to present differences in floristic composition between associations of the same type, i.e., dominated by the same tree species. All associations were separated into four groups: (*i*) group of associations dominated by *Quercus pubescens* and/or *Carpinus orientalis*, (*ii*) group of associations dominated by *Ostrya carpinifolia*, (*iii*) group of associations dominated by *Quercus frainetto* and/or *Quercus cerris* and (*iv*) group of associations dominated by *Quercus petraea* agg. Apart from the brief description of each association given below, synoptic tables (Tables 2–5) show floristic differences and similarities between associations within different groups. The distribution of the relevés of the different associations is given in a map (Fig. 2). Altitudinal zonation and distribution of associ-

ations across the biogeographical regions in B&H is given in Figure 3. The largest number of associations (13) occurs in the Mediterranean region; the Dinaric and Pre-Pannonian regions harbour ten associations each, while there are only five associations in the Transitional Illyrian-Moesian region. The biggest altitudinal range, with the highest altitudes of relevés, occurs in the Mediterranean region (130–1030 m), followed by the Dinaric (310-1000 m), Transitional Illyrian-Moesian (190–880 m) and Pre-Pannonian (250–780 m). An ecogram displaying the relative ecological range of each association along soil pH and moisture gradients is shown in Figure 4.

4.1 Group of associations dominated by *Quercus pubescens* and/or *Carpinus orientalis* (Table 2)

4.1.1 *Querco pubescenti-Carpinetum orientalis* Horvatić 1939 (Table 2, column 1)

Orig. (HORVATIĆ 1939): Asocijacija *Quercus lanuginosa-Carpinus orientalis*

Syn.: *Carpinetum orientalis croaticum* Horvatić 1939 nom. illeg. [Art. 34a], *Carpinetum orientalis adriaticum* Horvat et al. 1974 nom. illeg. [Art. 34a]

Neotypus hoc loco: tree layer: *Quercus pubescens* 4; upper shrub layer: *Carpinus orientalis* 5, *Fraxinus ornus* 1, *Cornus mas* 1, *Pistacia terebinthus* +; lower shrub layer: *Ruscus aculeatus* 2, *Asparagus acutifolius* 1, *Carpinus orientalis* 1, *Hedera helix* 1, *Cornus mas* 1, *Fraxinus ornus* 1, *Quercus pubescens* 1, *Sorbus torminalis* 1, *Frangula rupestris* +, *Clematis flammula* r, *Crataegus monogyna* r, *Juniperus oxycedrus* r, *Celtis australis* r, *Paliurus spina-christi* r; herb layer: *Brachypodium sylvaticum* +, *Carex halleriana* +, *Dictamnus albus* +, *Viola hirta* +, *Sesleria autumnalis* +, *Oenanthe pimpinelloides* +, *Acanthus spinosus* r, *Salvia pratensis* r.

Relevé details: B&H, southern Herzegovina, between Ljubuški and Čitluk, date 2014/07/23, author Vladimir Stupar, relevé area 400 m^2, altitude 180 m, slope 0°, limestone, deeper calcocambisol, 5% bare rock, cover tree layer 70%, cover upper shrub layer 90%, cover lower shrub layer 30%, cover herb layer 5%, lat. 43.199475, lon. 17.603471, GIVD EU-BA-001 (Global Index of Vegetation-Plot Databases) relevé number 323.

Note: This association was published with a synoptic table (HORVATIĆ 1939). Since there were no representative relevés of this association in published sources to which to refer, we selected a representative unpublished relevé.

Cocktail definition: *Quercus pubescens* >25% AND (Group Asparagus acutifolius OR Group Clematis flammula)

This is a zonal association of the submediterranean region of B&H, Montenegro and Croatia (Fig. 2a). In B&H it occurs in southernmost parts of the Mediterranean region (Bileća, Čitluk, Hamzići, Klobuk, Kravice, Ljubinje, Ljubuški, Međugorje, Popovo Polje, Prapratnica, Trebinje etc.). Typical stands are of closed canopy, dominated by *Quercus pubescens* in the tree layer, often with an admixture of *Carpinus orientalis,* sometimes with *Quercus cerris* and rarely *Quercus frainetto*, while in the understory, *Carpinus orientalis* and *Fraxinus ornus* dominate over *Acer monspessulanum*, *Cornus mas, Paliurus spina-christi, Frangula rupestris* and *Pistacia terebinthus*. The lower shrub layer is abundant with Mediterranean evergreen elements, such as: *Asparagus acutifolius*, *Juniperus oxycedrus*, *Phillyrea latifolia, Ruscus aculeatus* and deciduous *Clematis flammula* and *Rubus ulmifolius*. *Hedera helix* is very frequent in these stands, which indicates increased humidity. The herb layer is typically of low coverage (5–20%) due to the poor light conditions. The most abundant are thermophilous nemoral species: *Carex halleriana*, *Carex flacca* s.l., *Potentilla micrantha*, *Ptilostemon strictus*, *Sesleria autumnalis, Tamus communis* and *Viola hirta* agg.,

but there are also some mesophilous species with a high frequency, e.g.,: *Brachypodium sylvaticum*, *Dactylis glomerata* s.l. and *Veronica chamaedrys*. It occupies all aspects at altitudes between 100 and 600 m, on flat to moderate slopes, over limestone and dolomite with typically deeper but always rocky soils. In B&H, this type of forest has only been studied once from the aspect of forest typology (STEFANOVIĆ et al. 1977b) and no phytosociological relevés were provided. They are frequently degraded high forests, much less coppices, sometimes used as wood pasture.

4.1.2 *Rusco aculeati-Carpinetum orientalis* Blečić et Lakušić 1967 (Table 2, column 2)

Orig. (BLEČIĆ & LAKUŠIĆ 1967): *Rusco-Carpinetum orientalis*

non: *Rusco aculeati-Carpinetum orientalis* Quézel, Barbéro and Akman 1980 nom. illeg. [Art 31]

Typus: BLEČIĆ & LAKUŠIĆ 1967, Table on page 95, rel. 32 – lectotypus hoc loco

Cocktail definition: *Carpinus orientalis* >10% NOT (*Quercus pubescens* >10% OR *Quercus cerris* >10% OR *Quercus frainetto* >10% OR *Ostrya carpinifolia* >10%) AND (Group Asparagus acutifolius OR Group Clematis flammula)

This association consists of closed to semi-open scrub that is the secondary succession stage of *Querco-Carpinetum orientalis*. It is widely distributed in southern B&H (Fig. 2b; the Neretva River canyon, Grude, Hamzići, Kravice, Popovo Polje, Posušje etc.). It occurs on limestone or dolomite, in an altitudinal range from 100–400 m, regardless of aspect, on flat to moderate slopes. It completely lacks a tree layer and *Quercus pubescens* is found only occasionally in the shrub layer as the remnant of the original forest. The upper shrub layer is absolutely dominated by *Carpinus orientalis* accompanied by *Fraxinus ornus*. The high abundance of *Paliurus spina-christi* and *Petteria ramentacea* indicates its syngenetical connection to submediterranean *šibljak* vegetation. Another difference with *Querco-Carpinetum orientalis* is that it completely lacks mesophilous forest species. It is formed by the initial cutting of *Quercus pubescens* from the tree layer and later coppicing of *Carpinus orientalis* scrub which, because of the great sprouting capacity of this species, hampers progressive succession towards *Querco-Carpinetum orientalis*. Another path of establishment of this association is progressive succession of vegetation after fires or clear cuts. This community therefore harbours a number of species of open rocky habitats, such as: *Aethionema saxatile*, *Asperula purpurea*, *Bupleurum baldense* subsp. *gussonei, Melica ciliata, Satureja montana* s.l. It is degraded coppice, with intensive use as wood pasture.

4.1.3 *Carici hallerianae-Quercetum pubescentis* ass. nov. hoc loco (Table 2, column 3)

Syn.: *Orno-Quercetum pubescentis* Lakušić et al. 1991 nom. nud. [Art. 2b]

Typus: Supplement S1, rel. 4 – holotypus hoc loco

Cocktail definition: ((*Quercus pubescens* >25% AND *Carpinus orientalis* >5%) NOT *Ostrya carpinifolia* >5%) NOT (Group Asparagus acutifolius OR Group Clematis flammula OR Group Cnidium silaifolium)

This is an extrazonal, continental type of *Quercus pubescens* and *Carpinus orientalis* forests. It develops in central B&H, in the zone in which Continental and Mediterranean climates overlap, in the southern foothills of the Dinaric Alps or in the proximity of river canyons (Fig. 2c; River Ribnik valley, River Unac valley, River Vrbas mid-stream valley, Grmeč Mt, Manjača Mt, Mesihovina, Posušje etc.). It develops at altitudes of 300–900 m, on moderate slopes (15–20°) and mainly southern and western aspects. The bedrock is lime-

stone or dolomite and soils are of moderate depth. The tree layer is dominated by *Quercus pubescens*, sometimes accompanied by *Quercus cerris* or *Quercus petraea*. *Carpinus orientalis* dominates the shrub layer, always accompanied by *Fraxinus ornus*. Other important shrub species are mainly of thermophilous character: *Acer monspessulanum, Coronilla emerus* s.l, *Cornus mas, Crataegus monogyna, Euonymus verrucosus, Ligustrum vulgare, Lonicera etrusca*, *Rosa arvensis* and *Sorbus torminalis*. Average coverage of the herb layer is more than 50%, and *Sesleria autumnalis* is most abundant. Other important species of the herb layer are thermophilous: *Asperula cynanchica, Brachypodium pinnatum* s.l., *Bromus erectus* agg., *Campanula persicifolia, Carex halleriana, Festuca pseudovina* agg., *Teucrium chamaedrys, Viola hirta* agg. etc. Mesophilous species are rare and with low cover: *Brachypodium sylvaticum, Cruciata glabra, Dactylis glomerata* s.l. and *Veronica chamaedrys*. Although this association is relatively common, it had only previously been mentioned once, as "continental *Orno-Quercetum pubescentis*" (MURATSPAHIĆ et al. 1991). The reason for the neglect of this type of forest in the past may be its low economic value and relatively modest area of recent distribution (owing to the high degree of anthropogenic degradation). They are mainly degraded high forests and coppices, frequently used as wood pasture. The floristic composition of this association is shown in Supplement S1.

4.1.4 *Cruciato glabrae-Carpinetum orientalis* Šugar et Trinajstić ex Stupar et al. ass. nov. hoc loco (Table 2, column 4)

Syn.: *Carpinetum orientalis illyricum* Fabijanić 1960 nom. ined. [Art. 1], *Carpinetum orientalis illyricum* Stefanović 1961 nom. ined. [Art. 1], *Orno-Carpinetum orientalis* Fabijanić et al. 1963 nom. inval. [Art. 3b], *Carpinetum orientalis illyricum* Stefanović 1977 nom. illeg. [Art. 34a], *Carpinetum betuli-orientalis* Lakušić, Pavlović, Abadžić, et al. 1982 nom. inval. [Art. 5], *Cruciato glabrae-Carpinetum orientalis* Šugar et Trinajstić 1982 nom. nud. [Art. 2b], *Cruciato glabrae-Carpinetum orientalis* Šugar et Trinajstić 1988 nom. inval. [Art. 5], *Fraxino orni-Carpinetum orientalis* (Fabijanić et al. 1963) Stefanović 1988 [recte 1989] nom. inval [Art. 5], *Rusco aculeati-Carpinetum orientalis continentale* Lakušić et Redžić 1991 nom. nud.

Typus: ŠUGAR & TRINAJSTIĆ 1988, Tab. 1, rel. 6 - holotypus hoc loco

Cocktail definition: *Carpinus orientalis* >25% NOT (*Quercus cerris* >10% OR *Quercus petraea* agg. >10% OR *Quercus pubescens* >10% OR *Quercus frainetto* >10% OR *Ostrya carpinifolia* >10% OR Group Asparagus acutifolius OR Group Clematis flammula)

This association is widespread in the central belt of B&H (Dinaric and Transitional Illyrian-Moesian regions) under similar conditions as *Carici hallerianae-Quercetum pubescentis* (Fig. 2d). It is largely a secondary succession stage of the former association, but can also appear on sites of *Quercetum frainetto-cerris carpinetosum orientalis*, *Fraxino orni-Quercetum cerridis carpinetosum orientalis, Lathyro nigri-Quercetum petraeae* or *Aceri obtusati-Quercetum petraeae*. It is also known from Croatia (Lika) (ŠUGAR & TRINAJSTIĆ 1988). The altitudinal range is from 300–900 m, on primarily south and west facing mild to steep slopes. The bedrock is mainly limestone and dolomite, with the exception of several stands from E. B&H, which are found on siliceous sandstone. Oaks are found only in the juvenile form in the understory. The herb layer consists of thermophilous species such as: *Buglossoides purpurocaerulea, Campanula persicifolia, Carex halleriana, Festuca heterophylla, Lathyrus niger, Lathyrus venetus, Melittis melissophyllum, Potentilla micrantha, Sesleria autumnalis, Tamus communis, Tanacetum corymbosum* and *Viola hirta* agg., but also mesophilous: *Aremonia agrimonoides, Brachypodium sylvaticum, Cruciata glabra, Dactylis glomerata* s.l., *Helleborus odorus, Primula vulgaris* and *Veronica chamaedrys*.

However, cover of the herb layer is fairly low; in some stands it does not exceed 5%. This is largely due to the closed canopy formed by *Carpinus orientalis,* which does not allow much light to get to the ground. Stands are in the form of degraded coppice, frequently used as wood pastures.

4.1.5 *Seslerio autumnalis-Quercetum pubescentis* Zupančič 1999 (Table 2, column 5)

Orig. (ZUPANČIČ 1999): *Seslerio autumnalis-Quercetum pubescentis* ass. nova

Syn.: *Quercetum montanum submediterraneum* Fukarek 1970 p.p. nom. nud. [Art. 2b]

non: *Seslerio autumnalis-Quercetum pubescentis* Trinajstić 2008 nom. illeg. [Art. 31]

Cocktail definition: (*Quercus pubescens* >25% NOT (*Carpinus orientalis* >5% OR *Quercus cerris* >50%)) AND *Sesleria autumnalis* >1%) AND (Group Cnidium silaifolium OR Group Geranium sanguineum)

This submediterranean association is known from SW Slovenia (Kras) (ZUPANČIČ 1999), where it is found on flysch. While there it is found at lower altitudes (50–300 m) and is considered to be a secondary succession stage, in Herzegovina (the mountains Bijela Gora, Cincar, and Orjen; around Bileća, Gacko, Grude, Posušje, Široki Brijeg etc.) it occurs at much higher elevations (700–1000 m), where it forms an altitudinal belt between *Querco-Carpinetum orientalis* and beech forests (Fig. 2e). It can be found on moderate slopes of all aspects, where it is bound to deeper soil on limestone or dolomite. This *Quercus pubescens* forest is often accompanied by *Quercus cerris*. The main feature in the shrub layer is the absence of *Carpinus orientalis,* which appears only sporadically in the lower shrub layer, with low cover. The shrub layer is dominated by *Fraxinus ornus* and *Acer obtusatum* and much less by *Acer monspessulanum*. The herb layer is very abundant (over 75% of cover), with a dominance of *Sesleria autumnalis,* accompanied by submediterranean species: *Bunium alpinum* subsp. *montanum, Cnidium silaifolium, Thymus longicaulis* and some endemics, such as *Genista sylvestris* subsp. *dalmatica* and *Helleborus multifidus*. Other important species include those of forest fringes and more open habitats, such as: *Betonica officinalis, Brachypodium pinnatum* s.l.*, Carex humilis, Filipendula vulgaris, Geranium sanguineum, Trifolium alpestre* etc. and also thermophilous nemoral species: *Clinopodium vulgare, Lathyrus niger, Tanacetum corymbosum, Teucrium chamaedrys, Viola hirta* agg. etc. Sometimes degraded high forests or coppice, very often used as wood pasture.

4.1.6 *Aristolochio luteae-Quercetum pubescentis* (Horvat 1959) Poldini 2008 (Table 2, column 6)

Orig. (POLDINI 2008): *Aristolochio luteae-Quercetum pubescentis* (Horvat 1959) Poldini, nom. nov. hoc loco

Bas.: *Seslerio autumnalis-Ostryetum carpinifoliae quercetosum pubescentis* Horvat et Horvatić in Horvat 1950 ex Horvat 1959

Syn.: *Ostryo-Quercetum pubescentis* (Horvat 1959) Trinajstić 1977 nom. illeg. [Art. 32d], *Seslerio autumnalis-Quercetum pubescentis* Trinajstić 2008 non Zupančič 1999 nom. illeg. [Art. 31], *Fraxino orni-Ostryetum carpinifoliae* Braun-Blanquet 1961 nom. illeg. [Art. 31]

Cocktail definition: *Ostrya carpinifolia* >5% AND *Quercus pubescens* >5% AND Group Cnidium silaifolium

This association was described from Croatia under the name of *Ostryo-Quercetum pubescentis* (TRINAJSTIĆ 1977), and considered to be transitional association between *Querco pubescenti-Carpinetum orientalis* and *Seslerio-Ostryetum*. We encountered only six relevés

Table 2. Synoptic table for the group of associations dominated by *Quercus pubescens* and/or *Carpinus orientalis*: QpC, *Querco pubescenti-Carpinetum orientalis*; RuC, *Rusco aculeati-Carpinetum orientalis*; CaQ, *Carici hallerianae-Quercetum pubescentis*; CrC, *Cruciato glabrae-Carpinetum orientalis*; SeQ, *Seslerio autumnalis-Quercetum pubescentis*; ArQ, *Aristolochio luteae-Quercetum pubescentis*; AsQ, *Asparago tenuifolii-Quercetum pubescentis*. Frequency values of species are shown; species diagnostic for the association (phi values > 0.25) are shaded. Only ten diagnostic species with the highest fidelity and more than 20% frequency are shown for each association. Woody species that occurred in more than one layer were merged into one line.

Tabelle 2. Übersichtstabelle für die Gruppe der von *Quercus pubescens* und/oder *Carpinus orientalis* dominierten Assoziationen. Abkürzungen der Assoziationen s. o. Angegeben sind die Stetgkeiten der Arten (in %); diagnostische Arten für die jeweilige Assoziation (phi-Werte > 0,25) sind durch einen grauen Hintergrund markiert. Nur die zehn diagnostischen Arten mit der höchsten Treue und mehr als 20 % Stetigkeit sind für jede Assoziation aufgeführt. Gehölze, die in mehr als einer Schicht vorkamen, wurden in einer Zeile zusammengefasst.

Association	QpC	RuC	CaQ	CrC	SeQ	ArQ	AsQ
Number of relevés	28	21	25	118	35	6	23
Cornus mas	82	38	56	59	31	33	48
Juniperus oxycedrus	68	14	.	2	9	.	.
Carex halleriana	64	.	36	8	23	.	.
Frangula rupestris	50	24	20	6	23	17	.
Acer monspessulanum	54	81	32	27	40	33	4
Petteria ramentacea	29	62	4	2	20	.	.
Viola reichenbachiana	4	38	4	14	3	.	.
Melica ciliata	14	33	4	7	3	.	4
Bupleurum baldense subsp. *gussonei*	.	24	.	5	.	.	.
Cyclamen repandum	7	24	.	2	.	.	.
Acer campestre	14	10	60	40	6	.	52
Festuca heterophylla	14	10	52	25	20	.	43
Euonymus verrucosus	11	5	48	42	9	17	9
Lonicera etrusca	11	10	40	1	20	33	.
Campanula persicifolia	.	.	40	13	17	.	17
Veratrum nigrum	.	.	28	8	.	17	4
Asperula cynanchica	11	.	24	2	3	.	.
Serratula tinctoria	.	.	24	3	9	.	4
Ligustrum vulgare	7	24	44	67	.	33	39
Thymus pulegioides	.	19	16	52	6	17	22
Glechoma hirsuta	.	5	24	47	.	.	17
Viburnum lantana	.	.	24	37	.	.	13
Cyclamen purpurascens	.	.	4	36	.	.	4
Trifolium alpestre	7	.	28	10	77	33	22
Quercus cerris	46	.	44	26	74	33	30
Betonica officinalis	32	24	24	17	71	33	26
Filipendula vulgaris	18	19	16	19	63	33	39
Helleborus multifidus	25	5	24	6	49	.	17
Luzula multiflora	.	.	.	.	31	17	4
Inula salicina	7	.	.	3	26	.	4
Ostrya carpinifolia	4	19	24	41	17	100	17
Acer obtusatum	4	5	52	47	54	83	17
Hieracium tommasinianum	25	10	20	.	43	83	.

Association	QpC	RuC	CaQ	CrC	SeQ	ArQ	AsQ
Number of relevés	28	21	25	118	35	6	23
Bunium alpinum subsp. *montanum*	18	.	4	.	43	67	4
Asperula scutellaris	7	.	.	.	17	67	.
Cotoneaster nebrodensis	.	.	4	1	3	50	.
Serratula cetinjensis	.	.	.	.	14	50	.
Scilla lakusicii	.	.	.	.	9	33	.
Rosa tomentosa	4	.	.	.	3	33	4
Centaurea triumfettii	.	.	.	3	11	33	.
Brachypodium sylvaticum	57	19	52	30	20	.	91
Prunus spinosa	7	19	16	29	6	.	65
Carex flacca s.l.	39	10	16	3	11	.	61
Fragaria moschata	7	.	12	2	6	.	48
Rubus canescens	4	.	4	5	3	.	43
Pteridium aquilinum	.	5	8	15	.	.	39
Carpinus betulus	.	.	20	15	.	.	35
Tilia tomentosa	.	.	8	.	.	.	30
Carex montana	.	.	.	1	6	.	22
Astragalus glycyphyllos	.	.	8	4	.	.	22
Asparagus acutifolius	79	67	.	2	3	.	.
Ruscus aculeatus	64	71	12	17	.	.	.
Paliurus spina-christi	46	81	.	2	.	.	.
Rubus ulmifolius	46	76	.	2	6	.	.
Clematis flammula	39	38	8	.	6	17	.
Phillyrea latifolia	36	29	.	.	.	.	.
Pistacia terebinthus	32	43	.	2	3	.	.
Sesleria autumnalis	75	100	72	67	97	67	.
Cruciata glabra	4	5	72	42	14	.	61
Sorbus torminalis	14	5	72	32	20	.	57
Rosa arvensis	14	.	68	42	29	17	74
Prunus avium	.	.	32	9	3	.	35
Helleborus odorus	.	5	44	56	.	.	70
Geranium sanguineum	.	5	16	16	71	83	9
Cnidium silaifolium	7	.	4	.	69	83	4
Carex humilis	32	14	20	14	66	83	9
Thymus longicaulis	7	5	8	3	46	67	4
Carpinus orientalis	79	100	100	100	29	.	.
Quercus pubescens agg.	100	62	100	55	100	100	100
Fraxinus ornus	100	86	96	95	94	100	91
Viola hirta agg.	93	57	60	50	71	50	26
Brachypodium pinnatum s.l.	54	71	48	10	83	67	70
Dactylis glomerata s.l.	50	43	52	30	40	33	43
Hedera helix	50	52	24	36	3	.	35
Bromus erectus agg.	46	14	40	31	46	33	13
Tamus communis	46	52	60	27	20	17	61
Crataegus monogyna	43	71	88	73	51	50	83
Teucrium chamaedrys	39	67	48	61	63	83	70
Festuca pseudovina agg.	36	10	28	9	51	50	9
Asperula purpurea	36	38	16	26	29	17	13

Association	QpC	RuC	CaQ	CrC	SeQ	ArQ	AsQ
Number of relevés	28	21	25	118	35	6	23
Vincetoxicum hirundinaria	36	5	8	27	26	.	43
Veronica chamaedrys	32	14	32	25	11	33	22
Thalictrum minus	29	5	16	5	43	33	4
Lathyrus venetus	29	19	36	22	29	33	35
Potentilla micrantha	25	38	40	43	26	.	26
Coronilla emerus s.l.	21	29	24	23	9	17	4
Asplenium ceterach	21	33	4	26	6	.	.
Clematis vitalba	18	52	24	32	3	.	52
Melittis melissophyllum	14	.	40	33	23	33	30
Euphorbia cyparissias	14	.	28	34	29	17	35
Cotinus coggygria	14	.	16	32	14	.	17
Dorycnium pentaphyllum subsp. *germanicum*	11	.	24	19	26	33	48
Tanacetum corymbosum	11	5	48	23	34	33	35
Galium lucidum	11	.	24	40	17	17	22
Buglossoides purpurocaerulea	11	14	36	19	26	17	43
Lathyrus niger	7	.	36	11	43	17	35
Aremonia agrimonoides	4	.	48	27	20	33	30
Iris graminea	.	.	28	8	17	17	35
Quercus petraea agg.	.	.	32	36	3	17	30
Calamintha sylvatica	.	38	12	31	.	.	30

that fit the original diagnosis and all are from southern B&H (Orjen Mt), where this forest alternates with *Seslerio-Quercetum pubescentis,* between 900 and 1000 m on rockier and shallower soils of moderate slopes and predominantly eastern aspect (Fig. 2f). *Quercus pubescens* and *Ostrya carpinifolia* dominate the tree layer, with an admixture of *Fraxinus ornus* and *Acer obtusatum*. The herb layer is composed of *Bunium alpinum* subsp. *montanum, Carex humilis, Cnidium silaifolium, Geranium sanguineum, Hieracium tommasinianum, Sesleria autumnalis, Teucrium chamaedrys* etc. Degraded coppice, often used as wood pasture.

4.1.7 *Asparago tenuifolii-Quercetum pubescentis* Lakušić et Redžić 1991 (Table 2, column 7)

Orig. (LAKUŠIĆ & REDŽIĆ 1991): *Asparago-Quercetum pubescentis* ass. nova

Cocktail definition: (*Quercus pubescens* >25% AND (Group Cornus mas OR Group Prunus spinosa)) NOT (*Carpinus orientalis* >0% OR *Sesleria autumnalis* >0% OR *Ostrya carpinifolia* >5% OR *Quercus cerris* >50%)

This forest of *Quercus pubescens* also lacks *Carpinus orientalis*, but is differentiated from the submediterranean *Seslerio autumnalis-Quercetum pubescentis* by the absence of *Sesleria autumnalis* and all other submediterranean species. It is found in northern Bosnia, where it is bound to several localities with southerly exposed limestone outcrops on mild to moderate slopes and altitudes from 300–900 m (Grmeč, Kozara, Majevica, Manjača and Ozren Mts) (Fig. 2g). *Quercus cerris* and *Quercus petraea* agg. are sometimes admixed in the tree layer. The understory is dominated by *Fraxinus ornus, Sorbus torminalis, Acer campestre* and sometimes *Carpinus betulus, Tilia tomentosa* and *Acer obtusatum*. The shrub layer is composed of mainly mesophilous species: *Clematis vitalba, Crataegus monogyna,*

Ligustrum vulgare, Prunus spinosa, Pyrus pyraster, Rosa arvensis and, in some relevés, thermophilous species, such as *Cornus mas* and *Rubus canescens*. The herb layer is a mixture of thermophilous and mesophilous species: *Brachypodium pinnatum* s.l., *Brachypodium sylvaticum, Buglossoides purpurocaerulea, Carex flacca* s.l., *Cruciata glabra, Dactylis glomerata* s.l., *Festuca heterophylla, Fragaria moschata, Helleborus odorus, Symphytum tuberosum, Tamus communis, Teucrium chamaedrys, Vincetoxicum hirundinaria* etc. There was only one relevé previously recorded in B&H that fits the definition (LAKUŠIĆ & REDŽIĆ 1991). It was at that time recognized as a new association and validly named *Asparago tenuifolii-Quercetum pubescentis*, and although it is located further to the south (near Ribnik on the Sana River) and *Asparagus tenuifolius* occurs in only two relevés of this group, it otherwise floristically matches the stands from northern B&H, so we kept this name for the association. They are degraded high forests or coppice, frequently used as wood pasture. The floristic composition of this association is shown in Supplement S2.

4.2 Group of associations dominated by *Ostrya carpinifolia* (Table 3)

4.2.1 *Seslerio autumnalis-Ostryetum carpinifoliae* Horvat et Horvatić ex Horvat 1959 (Table 3, column 1)

Orig. (HORVAT 1959): *Seslerieto-Ostryetum*

Syn.: *Ostryeto-Seslerietum autumnalis* Horvat et Horvatić in Horvat 1950 nom. inval. [Art. 2b; 3b]

Typus: BUCALO 1999, Tab. 2, rel.8 - neotypus hoc loco

Note: This association was validly published with a synoptic table (HORVAT 1959), so we selected a representative published relevé of this association as a neotype.

Cocktail definition: *Ostrya carpinifolia* >25% NOT (Group Geranium robertianum OR *Quercus petraea* agg. >5% OR *Quercus pubescens* >5% OR *Quercus cerris* >10%)

This association was described from the submediterranean Dinaric Alps as an altitudinal belt between *Querco pubescenti-Carpinetum orientalis* and thermophilous beech forests (HORVAT 1950). However, in addition to the Mediterranean region (the mountains Bijela Gora, Ilija, Orjen and Viduša) in B&H it also occurs further inland (Dinaric and Pre-Pannonian regions), where it is found on limestone and dolomite, on moderate to very steep slopes and primarily southern aspects beneath thermophilous beech forests (mountains Čemernica, Grmeč, Igman, Jadovnik, Kozara, Maglić, Ozren, Trebević etc.; Fig. 2h). The altitudinal range is between 600 and 1200 m. These are mainly low forests dominated by *Ostrya carpinifolia* in the tree layer, always accompanied by *Fraxinus ornus* and often by *Acer obtusatum* and *Sorbus aria*. Much rarer, but still frequent are *Quercus petraea* agg., *Q. pubescens* and *Q. cerris*. The main feature of the herb layer is *Sesleria autumnalis* accompanied by xerothermophilous species *Carex humilis, Galium lucidum, Origanum vulgare, Polygonatum odoratum, Stachys recta, Tanacetum corymbosum, Teucrium chamaedrys, Thymus pulegioides, Vincetoxicum hirundinaria* etc. Mesophilous species are rare and connected to two fairly mesophilous variants: subass. *coryletosum colurnae* and subass. *tilietosum* (FUKAREK 1970b), which are probably related to thermophilous beech forests of *Seslerio-Fagetum* and *Tilio-Acerion* ravine forests. Accessible stands are mainly used as irregular coppices with little importance to forestry.

Table 3. Synoptic table for the group of associations dominated by *Ostrya carpinifolia*: SeO, *Seslerio autumnalis-Ostryetum carpinifoliae*; RuO, *Rusco aculeati-Ostryetum carpinifoliae*; QuO, *Querco pubescenti- Ostryetum carpinifoliae*. Frequency values of species are shown; species diagnostic for the association (phi values > 0.25) are shaded. Only ten diagnostic species with the highest fidelity and more than 20% frequency are shown for each association. Woody species that occurred in more than one layer were merged into one line.

Tabelle 3. Übersichtstabelle für die Gruppe der von *Ostrya carpinifolia* dominierten Assoziationen. Abkürzungen der Assoziationen s.o. Angegeben sind die Stetgkeiten der Arten (in %); diagnostische Arten für die jeweilige Assoziation (phi-Werte > 0,25) sind durch einen grauen Hintergrund markiert. Nur die zehn diagnostischen Arten mit der höchsten Treue und mehr als 20 % Stetigkeit sind für jede Assoziation aufgeführt. Gehölze, die in mehr als einer Schicht vorkamen, wurden in einer Zeile zusammengefasst.

Association	SeO	RuO	QuO
Number of relevés	51	19	19
Sesleria autumnalis	94	68	16
Sorbus aria	76	63	21
Origanum vulgare	51	16	16
Quercus petraea agg.	49	21	21
Trifolium rubens	35	.	21
Thalictrum minus	31	.	5
Convallaria majalis	31	11	5
Scabiosa cinerea	29	5	5
Melica ciliata	22	5	.
Asplenium trichomanes	24	95	21
Fragaria vesca	35	79	16
Mycelis muralis	6	74	11
Cyclamen purpurascens	20	68	16
Carex digitata	18	68	11
Valeriana officinalis	8	68	5
Geranium robertianum	4	63	21
Asplenium ruta-muraria	8	53	.
Lamiastrum galeobdolon s.l.	8	47	5
Moehringia muscosa	8	42	.
Quercus pubescens agg.	24	16	100
Tamus communis	18	32	63
Glechoma hirsuta	4	21	58
Anthericum ramosum	12	.	53
Dorycnium pentaphyllum subsp. *germanicum*	16	11	42
Coronilla varia	8	11	37
Genista tinctoria	6	.	37
Silene nemoralis	2	5	37
Clematis recta	4	.	32
Campanula bononiensis	4	.	26
Ostrya carpinifolia	100	100	100
Fraxinus ornus	100	100	100
Galium lucidum	75	37	79
Teucrium chamaedrys	73	21	74
Acer obtusatum	57	74	37
Tanacetum corymbosum	51	37	74

Association	SeO	RuO	QuO
Number of relevés	51	19	19
Vincetoxicum hirundinaria	49	37	63
Crataegus monogyna	45	47	74
Euphorbia cyparissias	45	11	58
Brachypodium pinnatum s.l.	41	21	63
Euonymus verrucosus	39	68	32
Melittis melissophyllum	39	37	58
Potentilla micrantha	37	63	32
Coronilla emerus s.l.	25	58	5
Asplenium ceterach	24	53	5
Bromus erectus agg.	24	11	37
Juniperus communis	20	5	37
Clematis vitalba	18	74	53
Carpinus orientalis	18	63	16
Carex flacca s.l.	16	5	32
Primula vulgaris	14	47	16
Campanula persicifolia	14	32	53
Lonicera xylosteum	10	42	.
Melica uniflora	8	42	26
Achnatherum calamagrostis	8	42	16
Saxifraga rotundifolia	8	37	.
Hepatica nobilis	8	32	5
Arabis turrita	6	58	21
Asarum europaeum	6	58	21
Brachypodium sylvaticum	4	47	42
Digitalis grandiflora	4	21	26
Stellaria holostea	2	32	37
Campanula trachelium	2	32	32
Polypodium vulgare	2	32	.

4.2.2 *Rusco aculeati-Ostryetum carpinifoliae* Lakušić et Redžić ex Stupar et al. ass. nov. hoc loco (Table 3, column 2)

Syn.: *Rusco aculeati-Ostryetum carpinifoliae* Lakušić et Redžić 1991 nom. inval. [Art. 5], *Fraxino orni-Ostryetum carpinifoliae* auct. non Aichinger 1933 nom. illeg. [Art. 31]

Typus: LAKUŠIĆ & REDŽIĆ 1991, Tab. 6, rel. 12 - holotypus hoc loco

Cocktail definition: *Ostrya carpinifolia* >25% AND Group Geranium robertianum NOT *Quercus pubescens* >10%

This community forms a permanent stage on shallow rocky soils over limestone in river canyons of W. B&H (Una, Unac, Sana and Vrbas) (LAKUŠIĆ & REDŽIĆ 1991) (Fig. 2i). It thrives on steep slopes (25–45°), various aspects and altitudes from 300–1000 m. The canopy layer is dominated by *Ostrya carpinifolia*, while the dominant species of the understory are *Fraxinus ornus* and *Acer obtusatum*. Although *Sesleria autumnalis* still plays an important role, this association is distinguished from *Seslerio autumnalis-Ostryetum* by a set of mesophilous species e.g.: *Aremonia agrimonoides, Asarum europaeum, Carex digitata, Clematis vitalba, Lamiastrum galeobdolon* s.l., *Stellaria holostea* etc. and species of mesic rocky habitats: *Arabis turrita, Asplenium ruta-muraria, Asplenium trichomanes, Geranium*

robertianum, Moehringia muscosa, Mycelis muralis, Saxifraga rotundifolia etc. The stands are mainly difficult of access, so there is almost no current use, but signs of coppicing in previous times are evident.

4.2.3 *Querco pubescenti-Ostryetum carpinifoliae* Horvat 1938 (Table 3, column 3)

Orig. (HORVAT 1938): *Querceto-Ostryetum carpinifoliae*

Syn.: asocijacija *Quercus pubescens-Geranium sanguineum* Horvat 1937 nom. nud. [Art. 2b]

Typus: HORVAT 1938, Tab. 1, rel. 8 – lectotypus hoc loco

Cocktail definition: (*Ostrya carpinifolia* >5% AND *Quercus pubescens* >5%) NOT (*Quercus cerris* >50% OR *Quercus petraea* agg. >10% OR *Carpinus orientalis* >5% OR Group Cnidium silaifolium)

This association was described from continental Croatia (HORVAT 1938), on southerly exposed, steep limestone outcrops. HORVAT (1950, 1963) suggests that the same type must be distributed in similar places in the mountains of northern B&H. Indeed, they have been found on the mountains Trebević (STEFANOVIĆ 1964b), Majevica (FABIJANIĆ et al. 1967) and, more recently, Grmeč, Kozara, Manjača and Ozren, where they are often linked to forests of *Asparago tenuifolii-Quercetum pubescentis* (Fig. 2j). They thrive over limestone and dolomite, on shallow rocky soil and steep slopes. Altitudes are between 300 and 1000 m, always on southern aspect. The canopy is codominated by *Ostrya carpinifolia* and *Quercus pubescens*, while much less by *Acer obtusatum, Acer campestre* and *Quercus cerris*. The main species in the understory is *Fraxinus ornus*, sometimes accompanied by *Cotinus coggygria*. The shrub layer is represented by *Chamaecytisus hirsutus, Cornus mas, Cornus sanguinea, Corylus avellana, Crataegus monogyna, Euonymus verrucosus, Genista tictoria*, *Juniperus communis, Prunus spinosa, Rosa arvensis, Sorbus torminalis,* etc. The herb layer is composed of the xerothermophilous species *Euphorbia cyparissias, Galium lucidum, Teucrium chamadrys, Vincetoxicum hirundinaria*; thermophilous species: *Campanula persicifolia, Melittis melissophyllum, Tamus communis, Tanacetum corymbosum* and mesophilous ones *Brachypodium sylvaticum, Clematis vitalba, Dactylis glomerata* s.l., *Glechoma hirsuta, Helleborus odorus, Stelaria holostea, Symphytum tuberosum* etc. Since they are mainly found on rocky and difficult of access terrain, they have been used as irregular coppices, with little importance to forestry.

4.3 Group of associations dominated by *Quercus frainetto* and/or *Quercus cerris* (Table 4)

4.3.1 *Quercetum frainetto-cerridis* (Rudski 1949) Trinajstić et al. 1996 (Table 4, column 1)

Orig. (TRINAJSTIĆ et al. 1996): *Quercetum frainetto-cerris* Rudski 1949

Syn.: *Quercetum confertae-cerridis serbicum* Rudski 1949 nom. illeg. [Art. 34a], *Quercetum frainetto-cerridis moesiacum* Horvat et al. 1974 nom. illeg. [Art. 34a], *Quercetum frainetto hercegovinicum* Fukarek 1966 nom. illeg. [Art. 34a]

Typus: RUDSKI 1949, Tab. 4, rel. 5 – lectotypus hoc loco

Cocktail definition: (*Quercus frainetto* >25% NOT *Quercus petraea* agg. >10%) AND (Group Melittis melissophyllum OR Group Galium pseudaristatum OR Group Lychnis coronaria OR Group Hieracium racemosum OR Group Chamaecytisus austriacus OR Group Veronica officinalis OR Group Carex pilosa OR Group Teucrium chamaedrys)

This rather heterogeneous association was first described by RUDSKI (1949) in central Serbia. It is zonal forest of the central Balkans (HORVAT et al. 1974), with several subassociations and ecological or geographical variants described (TOMIĆ & RAKONJAC 2013). In B&H it is found in the eastern part (Transitional Illyrian-Moesian region; narrow belt along the River Drina, from Foča to Bijeljina, Majevica Mt), with exclaves in southern (lower Herzegovina, Jablanica region), central (Zenica region) and northern B&H (Vučjak Mt) (Fig. 2k). It occurs over deep soil, mainly on acidic substrate, on mild to moderate slopes, predominantly southern and western aspects, with the altitudinal range of 200–500 m. The main species in the tree layer is *Quercus franetto,* almost always accompanied by *Quercus cerris*, but much less *Quercus petraea.* The understory is built of *Fraxinus ornus* and, in some stands, of *Carpinus orientalis*, while in others of *Carpinus betulus, Acer tataricum* and *Acer campestre.* Other frequent species of the shrub layer are *Ligustrum vulgare, Prunus spinosa, Pyrus pyraster, Sorbus torminalis* etc. The herb layer is always made up of thermophilous species and some that are acid tolerant: *Chamaecytisus hirsutus* agg., *Clinopodium vulgare, Dianthus armeria, Euphorbia cyparissias, Festuca heterophylla, Galium pseudaristatum, Genista tinctoria, Hieracium pilosella, Hieracium sabaudum, Lathyrus niger, Lychnis coronaria, Physospermum cornubiense, Potentilla micrantha, Pteridium aquilinum, Silene viridiflora, Teucrium chamaedrys, Thymus pulegioides, Veronica officinalis* etc. The association *Quercetum frainetto hercegovinicum* that was described for southern B&H (FUKAREK 1966) could not be recognized because there were no original relevés (only a synoptic table was provided in the original diagnosis). However, our relevés from this region fitted the scope of the traditionally accepted association. The stands are mainly degraded high forests and coppices, often used as wood pasture.

4.3.2 *Fraxino orni-Quercetum cerridis* Stefanović 1968 nom. mut. propos. [Art. 45] (Table 4, column 2)

Orig. (STEFANOVIĆ 1968): *Orno-Quercetum cerris* ass. nov.

Syn.: *Quercetum cerridis hercegovinicum* Fukarek 1970 nom. nud. [Art. 2b], *Quercetum montanum submediterraneum* Fukarek 1970 p.p. nom. nud. [Art. 2b, 3a], *Carpino orientalis-Quercetum cerridis* Lakušić 1976 nom. nud. [Art. 2b], *Quercetum cerris mediterraneo-montanum* Lakušić et Kutleša 1976 nom. nud. [Art. 2b], *Lathyro nigri-Quercetum cerridis* Redžić et Barudanović 2010, *Lithospermo-Qeurcetum cerridis* Redžić 2011 nom. nud. [Art. 2b]

non: *Fraxino orni-Quercetum cerridis* Kevey & Sonnevend in Kevey 2008 nom. illeg. [Art. 31]

non: *Fraxino orni-Quercetum cerridis* Stefanović 1968 sensu Tomić 1997

Typus: STEFANOVIĆ 1968, Tab. 1, rel. 6 – lectotypus hoc loco

Cocktail definition: *Quercus cerris* >25% NOT (*Quercus frainetto* >5% OR *Quercus petraea* agg. >10% OR *Quercus pubescens* >25% OR *Ostrya carpinifolia* >25% OR Group Asparagus acutifolius OR Group Luzula luzuloides)

Quercus cerris is the main species in the canopy layer, which is accompanied to a much lesser extent by *Acer obtusatum, Quercus pubescens, Quercus petraea* agg. and *Ostrya carpinifolia*. It was originally described from western B&H (STEFANOVIĆ 1968), with three subassociations: *carpinetosum orientalis* from the southern part of the distribution area (Aržano, Posušje, Trebinje (Lastva, Tuli), Unac River valley); *quercetosum petraeae* from the northern part of the distribution area, or on deeper soil and northern aspects in the southern part (Grmeč Mt, Kozara Mt, Pastirevo Mt, Petrovačko Polje, Bileća (Meka Gruda), Posušje, Trebinje (Zupci, Ubli); *ostryetosum carpinifoliae,* which occurs throughout the

Table 4. Synoptic table for the group of associations dominated by *Quercus frainetto* and/or *Quercus cerris*: Qfc, *Quercetum frainetto-cerridis*; FrQ, *Fraxino orni-Quercetum cerridis*. Frequency values of species are shown; species diagnostic for the association (phi values > 0.25) are shaded. Only ten diagnostic species with the highest fidelity and more than 20% frequency are shown for each association. Woody species that occurred in more than one layer were merged into one line.

Tabelle 4. Übersichtstabelle für die Gruppe der von *Quercus frainetto* und/oder *Quercus cerris* dominierten Assoziationen. Abkürzungen der Assoziationen s.o. Angegeben sind die Stetgkeiten der Arten (in %); diagnostische Arten für die jeweilige Assoziation (phi-Werte > 0,25) sind durch einen grauen Hintergrund markiert. Nur die zehn diagnostischen Arten mit der höchsten Treue und mehr als 20 % Stetigkeit sind für jede Assoziation aufgeführt. Gehölze, die in mehr als einer Schicht vorkamen, wurden in einer Zeile zusammengefasst.

Association	Qfc	FrQ
Number of relevés	53	87
Quercus frainetto	100	.
Quercus petraea agg.	58	24
Acer tataricum	40	7
Juniperus communis	36	9
Helleborus odorus	36	8
Hieracium pilosella	30	3
Dianthus armeria	30	.
Lychnis coronaria	28	2
Physospermum cornubiense	28	.
Betula pendula	26	.
Crataegus monogyna	42	86
Festuca heterophylla	30	79
Rosa arvensis	32	70
Cruciata glabra	4	66
Betonica officinalis	11	56
Filipendula vulgaris	2	55
Helleborus multifidus	.	54
Buglossoides purpurocaerulea	17	52
Symphytum tuberosum	8	51
Sesleria autumnalis	9	48
Quercus cerris	91	100
Fraxinus ornus	81	84
Dactylis glomerata s.l.	58	64
Carpinus orientalis	55	29
Lathyrus niger	55	77
Potentilla micrantha	47	52
Silene viridiflora	45	21
Pyrus pyraster	45	53
Euphorbia cyparissias	43	18
Thymus pulegioides	43	20
Genista tinctoria	43	21
Clinopodium vulgare	42	67
Carex caryophyllea	42	29
Brachypodium pinnatum s.l.	40	59
Acer campestre	40	52

Association Number of relevés	Qfc 53	FrQ 87
Carpinus betulus	40	28
Chamaecytisus hirsutus agg.	38	26
Veronica chamaedrys	36	46
Ligustrum vulgare	34	37
Fragaria vesca	34	22
Teucrium chamaedrys	32	49
Pteridium aquilinum	32	21
Veronica officinalis	32	17
Hypericum perforatum	30	9
Galium lucidum	30	32
Prunella vulgaris	30	14
Primula vulgaris	28	20
Sorbus torminalis	26	54
Prunus spinosa	26	48
Melittis melissophyllum	26	45
Tamus communis	26	40
Viola hirta agg.	25	34
Hieracium sabaudum	25	25
Cornus mas	21	47
Prunus avium	21	41
Vincetoxicum hirundinaria	17	39
Quercus pubescens agg.	17	38
Carex montana	17	32
Brachypodium sylvaticum	17	32
Corylus avellana	15	33
Dorycnium pentaphyllum subsp. *germanicum*	15	24
Tanacetum corymbosum	13	43
Malus sylvestris	13	39
Bromus erectus agg.	13	29
Serratula tinctoria	9	31
Verbascum nigrum s.l.	8	29
Geum urbanum	6	26
Carex flacca s.l.	6	25
Pimpinella saxifraga	6	24

association range in more humid and rocky habitats. This heliophilous association is typical of dry karst fields of western and southern B&H, where it occupies flat terrain or mild to moderate slopes on deep soil over carbonate bedrock (Fig. 2l). The typical altitudinal range is 600–800 m. A faithful species of the shrub layer is *Fraxinus ornus* together with *Cornus mas, Corylus avellana, Malus sylvestris, Prunus avium, Prunus spinosa, Pyrus pyraster, Rosa arvensis* and *Sorbus torminalis*. *Carpinus orientalis* is characteristic of subass. *carpinetosum orientalis,* together with *Sesleria autumnalis* in the herb layer, while *Carpinus betulus* and *Quercus petraea* agg. occur in subass. *quercetosum petraeae*. The herb layer of all subassociations is composed of several sets of species (thermophilous, heliophilous, mesophilous and slightly acidophilous): *Betonica officinalis, Brachypodium pinnatum* s.l.,

Buglossoides purpurocaerulea, Clinopodium vulgare, Cruciata glabra, Dactylis glomerata s.l., *Festuca heterophylla, Filipendula vulgaris, Helleborus multifidus, Iris graminea, Lathyrus niger, Melittis melissophyllum, Potentilla micrantha, Serratula tinctoria, Symphytum tuberosum, Teucrium chamaedrys, Trifolium alpestre, Veronica chamaedrys* etc. Although these are mainly irregularly cut high forests, they are often degraded by spring forest fires and grazing, so they form a distinctive park-forest feature. This variant is similar throughout the distribution range of the association and is characterized by the absence of a shrub layer and high cover of light demanding species of the forest mantle and dry grasslands: *Brachypodium pinnatum* s.l., *Filipendula vulgaris, Geranium sanguineum*, *Trifolium montanum* etc.

4.4 Group of associations dominated by *Quercus petraea* agg. (Table 5)

4.4.1 *Lathyro nigri-Quercetum petraeae* Horvat (1938) 1959 (Table 5, column 1)

Orig. (HORVAT 1959): *Lathyreto-Quercetum petraeae*

Bas.: *Querco pubescenti-Ostryetum carpinifoliae quercetosum petraeae* Horvat 1938

Syn.: *Serratulo tinctoriae-Quercetum petraeae* Zupančič et Vreš in Zupančič et al. 2009 nom. superf. [Art. 29a], *Quercetum petraeo-cerridis* Jovanović (1960) 1979 *seslerietosum autumnalis* Redžić et Barudanović 2010

non: *Lathyro nigri-Quercetum petraeae* Horvat (1938) 1959 sensu Vukelić 1990, Baričević 2006

Typus: HORVAT 1938, Tab. 1, rel. 12 – lectotypus hoc loco

Cocktail definition: *Quercus petraea* agg. >10% AND (*Ostrya carpinifolia* >0% OR Group Melittis melissophyllum) NOT (Group Luzula luzuloides OR Group Carex pilosa OR *Quercus pubescens* agg. >25% OR (*Carpinus betulus* >0% AND *Carpinus orientalis* >0%))

This association has been treated in an inconsistent manner (VUKELIĆ 1990, BARIČEVIĆ et al. 2006b). Here, we treat it as in the original diagnosis (HORVAT 1938), i.e., *Quercus petraea* dominated forests over deep carbonate soil, with a dominance of baso-neutrophilous species (HORVAT 1963, ŠUGAR 1972, REGULA-BEVILACQUA 1978, ZUPANČIČ et al. 2009). The understory is made up of *Fraxinus ornus, Acer obtusatum* and *Ostrya carpinifolia*. The shrub layer consists of *Carpinus orientalis, Corylus avellana, Crataegus monogyna, Euonymus verrucosus, Pyrus pyraster, Sorbus aria* etc. The herb layer is mainly thermophilous: *Clinopodium vulgare, Iris graminea, Lathyrus niger, Melittis melissophyllum, Potentilla micrantha, Sesleria autumnalis, Tanacetum corymbosum* etc. Mesophilous species have much lower frequency: *Aremonia agrimonoides, Cruciata glabra* and *Helleborus odorus* to mention the most frequent. *Pteridium aquilinum, Serratula tinctoria* and *Silene nutans* indicate slight acidity in the upper soil layer due to carbonates leaching. This forest occurs on carbonate bedrock across B&H (the mountains Crvanj, Čemernica, Jadovnik, Kozara, Majevica, Makljen, Manjača, Motajica, Starčevica, Trebava, Vlašić; Fig. 2m), at altitudes from 400 to 1200 m, mainly on moderate, south facing slopes. On some mountains (e.g., Čemernica) it forms an altitudinal belt below Dinaric thermophilous beech forests of *Aceri obtusati-Fagetum*. They are degraded high forests or coppices, which are under high negative human influence. They are often used as wood pasture.

4.4.2 *Aceri obtusati-Quercetum petraeae* ass. nov. hoc loco (Table 5, column 2)

Typus: Supplement S3, rel. 9 – holotypus hoc loco

Cocktail definition: *Quercus petraea* agg. >25% AND *Carpinus betulus* >1% AND *Carpinus orientalis* >1% AND Group Aremonia agrimonoides NOT (*Quercus frainetto* >0% OR *Quercus pubescens* >25%)

This interesting meso-thermophilous association, although quite common in NW B&H, had not previously been recorded (Fig. 2n). While the tree layer is dominated almost exclusively by *Quercus petraea*, the understory is much more diverse and consists mostly of thermophilous species, amongst which the most abundant is *Carpinus* orientalis. Others include *Acer obtusatum, Cornus mas, Euonymus verrucosus, Fraxinus ornus, Quercus pubescens, Sorbus torminalis* and *Viburnum lantana,* but there are also some mesophilous species that are present in almost every relevé: *Acer campestre, Carpinus betulus, Crataegus monogyna* and *Prunus avium*. In contrast, the herb layer is mostly made up of mesophilous species: *Aremonia agrimonoides, Cruciata glabra, Glechoma hirsuta, Helleborus odorus, Primula vulgaris, Sanicula europaea, Stellaria holostea, Symphytum tuberosum, Veronica chamaedrys* etc., although there are also some thermophilous species with high frequency: *Buglossoides purpurocarulea, Cyclamen purpurascens, Festuca heterophylla, Lathyrus niger, Lathyrus venetus, Melittis melissophyllum, Potentilla micrantha, Tamus communis, Tanacetum corymbosum, Viola hirta* agg. etc. This association clearly represents the transition from thermophilous forests of *Carpinion orientalis* towards mesophilous forests of *Carpinion betuli*. They are found in the NW B&H (the mountains Čemernica, Grmeč, Kozara, Manjača, Starčevica) in the zone in which mediterranean and continental climates mix, and also *Carpinus betulus* and *Carpinus orientalis* meet and compete each other. They occur at 300–900 m, on flat to moderate slopes on mainly warm exposures on limestone and dolomite. This association is newly described and its floristic composition is presented in Supplement S3. They are mainly degraded high forests or coppices, often used as wood pasture.

4.4.3 *Cytiso hirsuti-Quercetum petraeae* (Stefanović 1964) Pallas in Bohn et Neuhäusl 2004 (Table 5, column 3)

Orig. (BOHN & NEUHÄUSL 2004): *Cytiso hirsuti-Quercetum petraeae* (Stefanovic 1964) Pallas 2003 nom. nov. hoc loco pro nom. illegit. (Art. 34) *Quercetum montanum illyricum* Stefanovic 1964

Syn.: *Quercetum montanum illyricum* Stefanović 1964 nom. illeg. [Art. 34a], *Luzulo nemorosae-Quercetum petraeae* Redžić 2007

Cocktail definition: (*Quercus petraea* agg. >10% NOT (*Quercus frainetto* >10% OR Group Cornus mas)) AND (Group Galium pseudaristatum OR Group Lychnis coronaria OR Group Hieracium racemosum OR Group Chamaecytisus austriacus OR Group Veronica officinalis) NOT (Group Festuca drymeja OR Group Melittis melissophyllum)

These species-poor forests are found on dry, shallow and acidic soil over siliceous bedrock (andesite, dacite, siliceous sandstone and schists), mainly in eastern B&H (Transitional Illyrian-Moesian region; Drina River basin (Foča, Goražde, Srebrenica, Ustikolina), but stands are also scattered over the northern part of the country (Pre-Pannonian region; the mountains Becanj, Kozara, Krnjin, Ljubić, Motajica and Trebava) when ecological conditions meet the demands of the community (Fig. 2o). The altitudinal range is (300)500-900 m, on mainly south and west facing moderate to steep slopes. This community is the westernmost type of dry acidophilous forests of *Quercion petraeo-cerridis,* which have the centre of their distribution in the central Balkans (ČARNI et al. 2009). The tree layer is dominated by *Quercus petraea* and/or *Quercus cerris* (sometimes accompanied by *Quercus frainetto*), while the herb layer is dominated by species tolerant of soil acidity and dryness: *Chamaecytisus hirsutus, Chamaespartium sagittale*, *Genista pilosa, Genista tinctoria*, *Hieracium murorum, Hieracium pilosella, Hieracium piloselloides, Hieracium praealtum* subsp. *bau-*

Table 5. Synoptic table for the group of associations dominated by *Quercus petraea*: LaQ, *Lathyro nigri-Quercetum petraeae*; AcQ, *Aceri obtusati-Quercetum petraeae*; CyQ, *Cytiso hirsuti-Quercetum petraeae*; FeQ, *Festuco drymejae-Quercetum petraeae*; PoQ, *Potentillo micranthae-Quercetum petraeae*; SaQ, *Seslerio autumnalis-Quercetum petraeae*. Frequency values of species are shown; species diagnostic for the association (phi values > 0.25) are shaded. Only ten diagnostic species with the highest fidelity and more than 20% frequency are shown for each association. Woody species that occurred in more than one layer were merged into one line.

Tabelle 5. Übersichtstabelle für die Gruppe der von *Quercus petraea* dominierten Assoziationen. Abkürzungen der Assoziationen s. o. Angegeben sind die Stetgkeiten der Arten (in %); diagnostische Arten für die jeweilige Assoziation (phi-Werte > 0,25) sind durch einen grauen Hintergrund markiert. Nur die zehn diagnostischen Arten mit der höchsten Treue und mehr als 20 % Stetigkeit sind für jede Assoziation aufgeführt. Gehölze, die in mehr als einer Schicht vorkamen, wurden in einer Zeile zusammengefasst.

Association	LaQ	AcQ	CyQ	FeQ	PoQ	SaQ
Number of relevés	30	30	57	24	38	9
Clinopodium vulgare	67	23	32	17	34	44
Iris graminea	47	10	.	.	5	.
Ostrya carpinifolia	43	3	.	.	3	11
Sorbus aria	37	.	.	.	.	11
Veratrum nigrum	33	20	.	.	.	.
Origanum vulgare	33	.	.	.	.	.
Vincetoxicum hirundinaria	30	10	.	13	8	.
Serratula tinctoria	30	10	5	13	13	.
Mercurialis perennis	30	10	.	.	.	.
Peucedanum austriacum	23	.	.	.	.	.
Acer campestre	33	100	16	58	18	.
Carpinus orientalis	50	97	14	8	5	22
Cornus mas	33	77	2	4	11	11
Tamus communis	30	77	11	38	24	.
Glechoma hirsuta	20	73	2	4	5	.
Ligustrum vulgare	27	70	7	25	.	.
Hedera helix	13	63	2	17	24	.
Viburnum lantana	20	53	2	.	.	.
Stellaria holostea	23	53	.	.	.	.
Sanicula europaea	7	50	.	.	3	11
Hieracium sabaudum	3	20	74	33	34	.
Quercus cerris	20	13	72	8	5	.
Hieracium pilosella	.	3	53	.	3	.
Chamaespartium sagittale	.	.	49	.	3	22
Melampyrum pratense	7	3	37	13	18	.
Rubus fruticosus agg.	.	3	28	4	.	.
Luzula pilosa	.	3	28	.	8	.
Avenella flexuosa	.	.	26	.	3	.
Prunus avium	40	70	25	83	47	.
Rubus hirtus	13	23	28	75	50	33
Carex pilosa	7	20	.	58	.	.
Epimedium alpinum	23	13	2	58	3	.
Acer tataricum	10	37	12	54	.	.
Ruscus hypoglossum	.	7	.	25	5	.

Association	LaQ	AcQ	CyQ	FeQ	PoQ	SaQ
Number of relevés	30	30	57	24	38	9
Genista tinctoria	13	3	68	50	79	44
Galium mollugo agg.	10	13	5	21	50	44
Carex flacca s.l.	30	20	9	42	50	.
Silene viridiflora	3	13	2	4	34	.
Hieracium racemosum	3	3	11	13	34	.
Hypericum montanum	17	.	5	4	32	.
Asplenium adiantum-nigrum	17	20	4	.	24	100
Sesleria autumnalis	47	17	5	.	.	100
Cardamine glauca	3	.	2	.	.	89
Lychnis flos-cuculi	3	.	.	.	5	89
Hieracium tommasinianum	.	.	.	.	.	89
Cephalanthera rubra	10	.	.	.	.	78
Hieracium piloselloides	3	.	2	.	5	78
Trifolium rubens	17	.	5	.	3	78
Lychnis viscaria	3	.	4	.	5	67
Juniperus oxycedrus	.	.	.	.	.	56
Helleborus odorus	53	97	16	.	.	.
Euonymus verrucosus	33	33	.	.	.	.
Quercus pubescens agg.	23	23	.	.	.	.
Festuca heterophylla	40	67	25	29	71	.
Veronica officinalis	7	.	67	4	5	44
Festuca drymeja	10	3	7	71	47	.
Galium schultesii	27	30	28	67	66	.
Tilia tomentosa	10	10	2	63	50	.
Fagus sylvatica	7	30	25	50	79	89
Tanacetum corymbosum	47	33	4	17	71	78
Luzula luzuloides	.	.	28	17	63	67
Hieracium murorum	10	3	18	13	55	78
Quercus petraea agg.	100	97	100	100	100	100
Fraxinus ornus	87	87	93	100	95	78
Dactylis glomerata s.l.	63	50	30	38	74	89
Lathyrus niger	60	47	25	67	84	67
Crataegus monogyna	60	97	35	46	39	.
Acer obtusatum	60	73	2	13	39	89
Rosa arvensis	57	83	26	58	39	.
Sorbus torminalis	57	97	21	79	84	56
Melittis melissophyllum	57	33	4	50	53	67
Potentilla micrantha	50	70	67	46	68	67
Cruciata glabra	50	93	35	67	45	.
Aremonia agrimonoides	50	60	.	.	29	44
Fragaria vesca	50	40	56	4	42	67
Corylus avellana	50	30	14	8	24	44
Pyrus pyraster	40	73	25	46	42	.
Primula vulgaris	37	77	4	8	21	44
Veronica chamaedrys	37	53	47	21	84	100
Brachypodium sylvaticum	37	47	14	50	39	.
Pteridium aquilinum	33	30	81	67	68	100

Association	LaQ	AcQ	CyQ	FeQ	PoQ	SaQ
Number of relevés	30	30	57	24	38	9
Chamaecytisus hirsutus agg.	30	3	60	46	45	89
Viola hirta agg.	30	40	19	8	13	44
Symphytum tuberosum	30	63	5	42	66	33
Silene nutans	30	3	25	4	34	.
Cyclamen purpurascens	27	37	.	.	5	11
Lathyrus vernus	27	50	2	50	37	44
Betonica officinalis	27	10	5	4	3	11
Teucrium chamaedrys	27	10	16	.	.	11
Buglossoides purpurocaerulea	23	40	2	.	.	.
Lathyrus venetus	23	40	7	8	26	.
Clematis vitalba	20	40	2	.	11	.
Brachypodium pinnatum s.l.	20	17	7	8	5	56
Juniperus communis	20	20	30	38	34	11
Carpinus betulus	17	83	23	58	42	.
Melica uniflora	17	43	5	21	8	.
Campanula persicifolia	13	23	7	29	39	78
Cephalanthera longifolia	13	27	9	42	39	.
Ajuga reptans	10	47	2	4	21	.
Galium lucidum	10	7	18	17	26	11
Pulmonaria officinalis	3	37	2	8	21	.
Luzula forsteri	3	27	35	33	45	.

hinii, *Luzula luzuloides*, *Veronica officinalis* etc. The only constant thermophilous species is *Potentilla micrantha*, while *Lathyrus niger* and *Festuca heterophylla* appear with much lower frequency. Apart from occasional dominance of *Fraxinus ornus*, the shrub layer is poor in species and coverage, which can be partly attributed to regular spring fires and browsing of domestic animals. They are frequently degraded high forests or coppices, often used as wood pastures.

Next page (nächste Seite):

Fig. 2. Distribution of relevés of the different associations of thermophilous deciduous forests in B&H (ordered as in the Results section): QpC, *Querco pubescenti-Carpinetum orientalis*; RuC, *Rusco aculeati-Carpinetum orientalis*; CaQ, *Carici hallerianae-Quercetum pubescentis*; CrC, *Cruciato glabrae-Carpinetum orientalis*; SeQ, *Seslerio autumnalis-Quercetum pubescentis*; ArQ, *Aristolochio luteae-Quercetum pubescentis*; AsQ, *Asparago tenuifolii-Quercetum pubescentis*; SeO, *Seslerio autumnalis-Ostryetum carpinifoliae*; RuO, *Rusco aculeati-Ostryetum carpinifoliae*; QuO, *Querco pubescenti-Ostryetum carpinifoliae*; Qfc, *Quercetum frainetto-cerridis*; FrQ, *Fraxino orni-Quercetum cerridis*; LaQ, *Lathyro nigri-Quercetum petraeae*; AcQ, *Aceri obtusati-Quercetum petraeae*; CyQ, *Cytiso hirsuti-Quercetum petraeae*; FeQ, *Festuco drymejae-Quercetum petraeae*; PoQ, *Potentillo micranthae-Quercetum petraeae*; SaQ, *Seslerio autumnalis-Quercetum petraeae*.

Abb. 2. Verteilung der Vegetationsaufnahmen der verschiedenen Assoziationen thermophiler Laubwälder in B&H (geordnet wie im Abschnitt Ergebnisse). Abkürzungen der Assoziationen s. o.

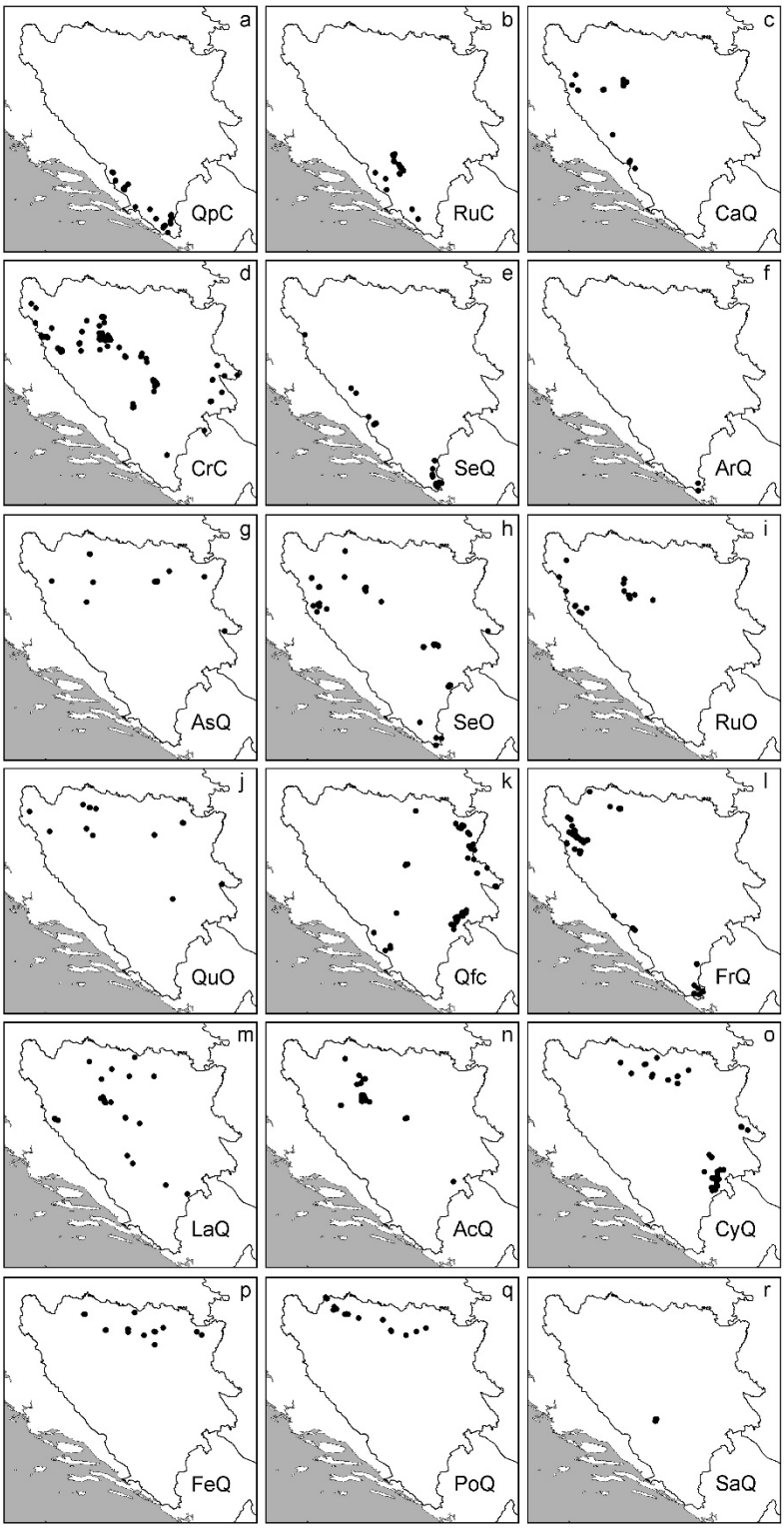
a
QpC
b
RuC
c
CaQ
d
CrC
e
SeQ
f
ArQ
g
AsQ
h
SeO
i
RuO
j
QuO
k
Qfc
l
FrQ
m
LaQ
n
AcQ
o
CyQ
p
FeQ
q
PoQ
r
SaQ

4.4.4 *Festuco drymejae-Quercetum petraeae* (Janković et Mišić 1960) Janković 1968 nom. mut. propos. [Art. 45] (Table 5, column 4)

Orig. (JANKOVIĆ 1968): *Festuco-Quercetum petraeae*

Bas.: *Quercetum montanum festucetosum montanae* Janković et Mišić 1960 nom. illeg. [art. 29b]

Syn.: *Lathyro nigrae-Quercetum petraeae* Horvat 1959 sensu Vukelić 1990, Baričević 2006

non: *Festuco drymeiae-Quercetum petraeae* Morariu, Ularu, Danciu et Lungescu 1970 nom. illeg. [art. 32b]

Typus: JANKOVIĆ & MIŠIĆ 1960, Tab. 4, rel. 9 – lectotypus hoc loco

Cocktail definition: (*Quercus petraea* agg. >50% NOT (*Carpinus orientalis* >0% OR *Sesleria autumnalis* >0%)) AND Group Melittis melissophyllum AND Group Carex pilosa AND (Group Luzula luzuloides OR Group Hieracium racemosum OR Group Festuca drymeja)

Originally described from Fruška Gora Mt. in Serbia (JANKOVIĆ & MIŠIĆ 1960), this association combines attributes of thermophilous, acidophilous and mesophilous *Quercus petraea* forests (HRUŠKA-DELL'UOMO 1975). The stands are found on low mountains of northern B&H (Becanj, Crni Vrh, Kozara, Krnjin, Ljubić, Majevica, Motajica, Ozren, Trebava) on deep soil over acidic substrate (non-carbonate flysch, siliceous sandstone, diabase, chert etc.), on moderate slopes of primarily southerly aspects (Fig. 2p). The association occupies the upper parts of slopes above meso-neutrophilous oak-hornbeam or beech forests (300–500 m), which explains the high frequency of *Carpinus betulus* or *Fagus sylvatica*, but it should be pointed out that they are of poor vitality, found only in the lower shrub layer with very low coverage (r/+). The only species in the tree layer is *Quercus petraea,* accompanied in the shrub layer by *Fraxinus ornus* and *Sorbus torminalis*, which on some stands can have very high abundance. Other species in the shrub layer include *Acer campestre, Acer tataricum, Chamaecytisus hirsutus, Genista tinctoria, Prunus avium, Rosa arvensis, Rubus hirtus, Tilia tomentosa,* etc. Thermophilous species are represented by: *Carex flacca* s.l., *Lathyrus niger, Melittis melissophyllum, Potentilla micrantha,* and *Tamus communis*, and acidophilous by: *Genista tinctoria, Hieracium sabaudum, Luzula forsteri, Pteridium aquilinum* etc. However, several mesophilous species give this association a peculiar transitional character: *Carex pilosa, Epimedium alpinum, Festuca drymeja* and *Galium schultesii*. These are mainly high, productive forests.

4.4.5 *Potentillo micranthae-Quercetum petraeae* Vukelić et al. ex Vukelić, Baričević et Šapić ass. nov. hoc. loco (Table 5, column 5)

Syn.: *Potentillo micranthae-Quercetum petraeae* Vukelić, Baričević et Šapić 2010 nom. inval. [Art 5], *Hieracio racemosi-Quercetum petraeae* Vukelić 1991 nom. illeg. [Art. 31] p.p.

Typus: VUKELIĆ et al. 2010, Tab. 1, rel. 15 – holotypus hoc loco

Cocktail definition: (*Quercus petraea* agg. >50% NOT (*Carpinus orientalis* >0% OR *Sesleria autumnalis* >0% OR Group Carex pilosa)) AND Group Melittis melissophyllum AND (Group Luzula luzuloides OR Group Hieracium racemosum OR Group Festuca drymeja)

Originally described from Zrinska gora (Croatia) (VUKELIĆ et al. 2010), this *Quercus petraea* association is a more acidophilous and less mesophilous community than *Festuco drymejae-Quercetum petraeae.* It appears on the upper parts of moderate to steep slopes and ridges, on deep soil over siliceous bedrock (diabase, chert, siliceous sandstone etc.), primarily on southern aspects. It is mainly found in the low mountains of north and northwestern B&H (Kozara, Krnjin, Ljubić, Motajica, Pastirevo, Planinica, Trebava) between 300 and 600 m (Fig. 2q). There is a larger number of acidophilous species, led by: *Genista tinctoria,*

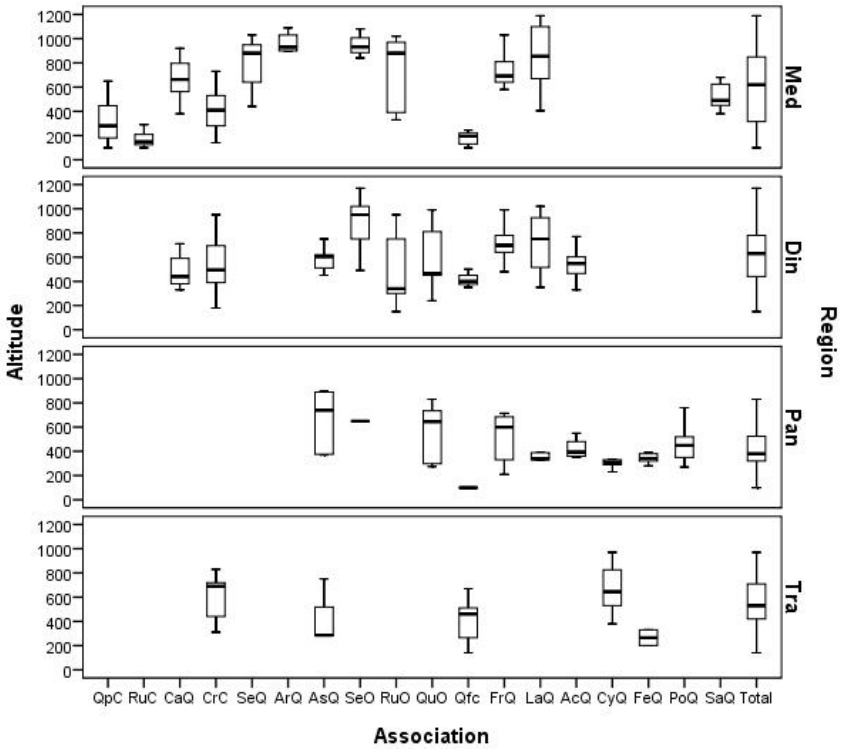

Fig. 3. Boxplot showing the altitudinal zonation and distribution of associations of thermophilous deciduous forests accross the biogeographical regions in B&H. Association names abbreviated as in Figure 2 and ordered as in the Results section; last column (total) presents altitudinal distribution of all relevés in biogeographical region. Biogeographical regions: **Med**, Mediterranean; **Din**, Dinaric; **Pan**, Pre-Pannonian; **Tra**, Transitional Illyrian-Moesian.

Abb. 3. Boxplotdiagramme mit der Höhenzonierung und Verbreitung von Assoziationen thermophiler Laubwälder in den biogeographischen Regionen in B&H. Die Assoziationen sind abgekürzt wie in Abbildung 2 und wie im Ergebnisteil geordnet; die letzte Spalte (Total) gibt die Höhenverteilung aller Vegetationsaufnahmen in der biogeographischen Region an. Biogeographische Regionen: **Med**, Mediterran; **Din**, Dinarisch; **Pan**, Prä-Pannonisch; **Tra**, Übergang Illyrisch-Moesisch.

Hieracium murorum, Hieracium racemosum, *Luzula luzuloides* and *Pteridium aquilinum,* but the many thermophilous species with high abundance give it a distinct character: *Carex flacca* s.l.*, Festuca heterophylla, Lathyrus niger, Melittis melissophyllum, Potentilla micrantha, Tanacetum corymbosum* etc. Although *Festuca drymeja* can be important for some relevés, it is not as frequent as in the former association and mesophilous *Carex pilosa* and *Epimedium alpinum* are completely absent. These are mainly high, productive forests.

4.4.6 *Seslerio autumnalis-Quercetum petraeae* Poldini ex Poldini 1982 (Table 5, column 6)

Orig. (POLDINI 1982): *Seslerio autumnalis-Quercetum petraeae*

Syn.: *Seslerio autumnalis-Quercetum petraeae* Poldini 1964 nom. nud. [Art. 2b]

Cocktail definition: *Quercus petraea* agg. >25% AND *Sesleria autumnalis* >0% AND Group Luzula luzuloides

This submediterranean association of *Quercus petraea* has been described on flysch of the border area of Italy and Slovenia (POLDINI 1964, 1982); it is also known from western Istria in Croatia (TRINAJSTIĆ 2008). In B&H it is found in southern B&H (Mediterranean region) on the gabbro complex near Jablanica (VOJNIKOVIĆ 2001) (Fig. 2r) at altitudes between 400 and 700 m and very steep (35–40°) south and west facing slopes. *Quercus petraea* agg. dominates the tree layer, while *Sesleria autumnalis* is most abundant in the herb layer. The shrub layer is composed of thermophilous *Fraxinus ornus, Acer obtusatum* and *Sorbus torminalis,* as well as acidophilous *Genista tinctoria* and *Genista pilosa.* The herb layer is a mixture of thermophilous and acidophilous elements: *Asplenium adiantum-nigrum, Campanula persicifolia, Genista pilosa, Hieracium murorum, Lathyrus niger, Luzula luzuloides, Lychnis viscaria, Melittis melissophyllum, Potentilla micrantha, Pteridium aquilinum, Tanacetum corymbosum, Thymus pulegioides, Trifolium rubens* etc. There are also some meso-neutrophilous species: *Dactylis glomerata* s.l., *Fagus sylvatica, Milium effusum, Mycelis muralis, Solidago virgaurea* etc. These are mainly degraded high forests or coppices, occasionally used as wood pasture.

5. Discussion

5.1 General overview of syntaxa

The analysis of thermophilous deciduous forests of B&H provided a syntaxonomical scheme that ecologically and floristically depicts phytosociological relations within this group in B&H and neighboring countries, as well as their relations with other vegetation types in this region.

The most thermophilous association, one that is in contact with the evergreen Mediterranean vegetation of *Quercetea ilicis,* is the ***Querco pubescenti-Carpinetum orientalis*** (Fig. 4). It is a zonal vegetation of submediterranean Croatia, B&H and Montenegro (HORVAT 1950, 1963). To a much lesser extent it also occurs in Slovenia (ZUPANČIČ 1999). At the present time, this association covers a relatively modest proportion of what is potentially its domain, mostly because of various negative anthropogenic influences (fires, coppicing, browsing etc.), but, ironically, the preserved stands are for the most part those preserved by man (private old groves). A similar situation is reported for Croatia (VUKELIĆ 2012), where the highest proportion of this association is presented by its secondary succession stage, i.e., scrub dominated by *Carpinus orientalis*. As suggested by SURINA (2014), this secondary stage does not represent zonal vegetation in the NW Adriatic, which supported our decision to limit the understanding of *Querco pubescenti-Carpinetum orientalis* to old growth stands that obviously represent climax stages, which is congruent with the original diagnosis (HORVATIĆ 1939, 1963, HORVAT 1950). Additionally, it supported the acceptance of ***Rusco aculeati-Carpinetum orientalis***, a scrub association that results from degradation of *Querco pubescenti-Carpinetum orientalis* and occupies the greater part of its potential habitats. It was originally described from southern Montenegro (BLEČIĆ & LAKUŠIĆ 1967) and later from the Neretva River canyon in southern B&H (MURATSPAHIĆ et al. 1991). It was confirmed by field research from various localities in southern B&H (lower Herzegovina). This type of vegetation alternates with *šibljak* vegetation, dry grasslands and vegetation of rocky habitats, with which it often makes vegetation mosaics that are very hard to circumscribe and delimit.

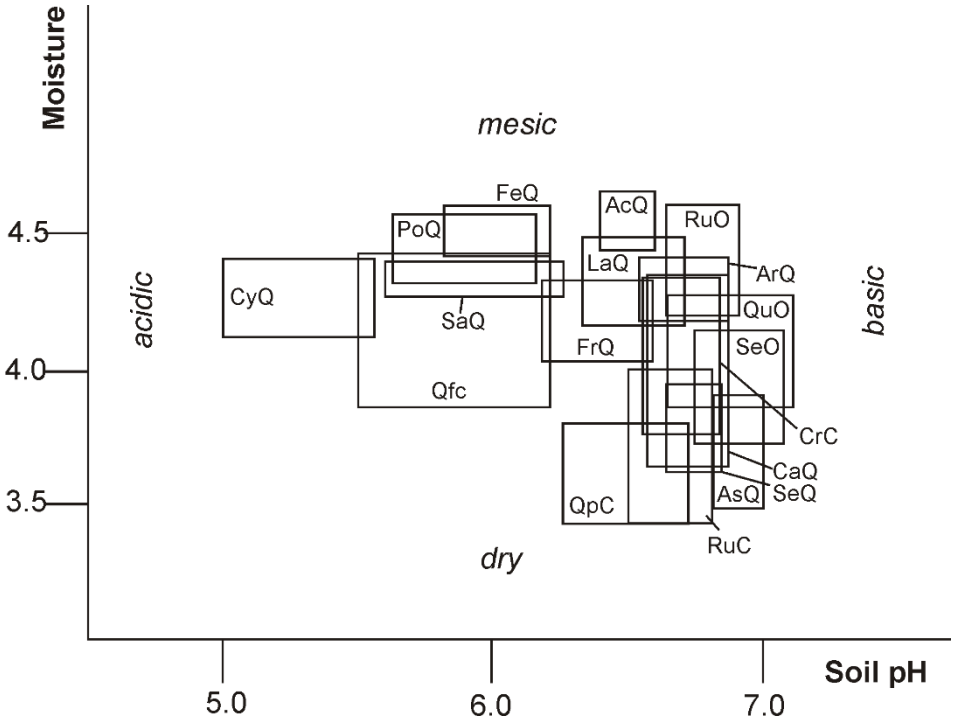

Fig. 4. Ecogram of associations of thermophilous deciduous forests of B&H using unweighted average species indicator values of the relevés for soil reaction and moisture (PIGNATTI et al. 2005). Figures for the drawing were taken from boxplot diagrams considering the first and third quartile (BAUER & BERGMEIER 2011). Association names abbreviated as in Figure 2.

Abb. 4. Ökogramm der Assoziationen thermophiler Laubwälder von B&H auf der Grundlage ungewichteter mittlerer Zeigerwerte von Vegetationsaufnahmen für Bodenreaktion und -feuchte (PIGNATTI et al. 2005). Die beruhen auf den ersten und dritten Quartilen von Boxplot-Diagrammen (BAUER & BERGMEIER 2011). Die Assoziationsnamen sind abgekürzt wie in Abbildung 2.

Deeper in the continent, on warm southerly exposed limestone and dolomite foothills, or in river canyons of central B&H (on mild to moderate slopes with not too shallow soil), we encountered an extrazonal variant of forest of *Quercus pubescens* and *Carpinus orientalis* and named it ***Carici hallerianae-Quercetum pubescentis***. Compared to *Querco pubescenti-Carpinetum orientalis* this type is poor in mediterranean elements (Table 2 and Supplement S1), but is also degraded and reduced to small patches, which was probably why it was not recognized earlier as an independent association in B&H. The largest proportion of its potential distribution is nowadays under secondary succession stages dominated by *Carpinus orientalis* i.e., ***Cruciato glabrae-Carpinetum orientalis,*** which is known from B&H mainly as *Carpinetum orientalis illyricum* and *Fraxino orni-Carpinetum orientalis* (FABIJANIĆ et al. 1963, STEFANOVIĆ 1964b, 1983, 1989). This degraded scrub has a relatively heterogenous floristic structure, since it is represented by various development phases and forms as a secondary succession stage on the habitats of several different forest types, i.e.: *Carici hallerianae-Quercetum pubescentis, Fraxino orni-Quercetum cerridis, Lathyro nigri-Quercetum petraeae, Aceri obtusati-Quercetum petraeae and Quercetum frainetto-cerridis*. The possible diversity of this association should be investigated by further research.

While forests of ***Seslerio autumnalis-Quercetum pubescentis*** in Slovenia occur on decalcified deep soil over flysch (ZUPANČIČ 1999), in southern B&H they mainly form an altitudinal belt between *Querco pubescenti-Carpinetum orientalis* and beech forests at higher altitudes (700–1000 m; Fig. 3), also on deeper soil but over limestone and dolomite. Stands similar to these, but with significant cover of *Ostrya carpinifolia* in the tree layer found on steeper rocky slopes, were classified as ***Aristolochio luteae-Quercetum pubescentis***. This association was originally described as the subassociation *quercetosum pubescentis* of *Seslerio autumnalis-Ostryetum carpinifoliae* (HORVAT 1950) and later raised to association level *Ostryo-Quercetum pubescentis* (TRINAJSTIĆ 1977). Similar type was described from Italy (southern Alps) under the name *Fraxino orni-Ostryetum carpinifoliae* (BRAUN-BLANQUET 1961). Although traditionally understood as a mesothermophilous submediterranean association of *Quercus pubescens* without *Carpinus orientalis* and mediterranean elements, but with *Ostrya carpinifolia* (TRINAJSTIĆ 1977, ZUPANČIČ 1999), there has recently been no consensus about its circumscription. SURINA (2014) classified relevés similar to the *Querco-Carpinetum orientalis* (but with *Ostrya carpinifolia*) from the NW Adriatic region (W Croatia) into the *Aristolochio luteae-Quercetum pubescentis* and marked this ssociation as zonal for this region. On the other hand, VUKELIĆ (2012) included the complete association of *Seslerio autumnalis-Ostryetum carpinifoliae* (*Ostrya carpinifolia* dominated forests) along with all subassociations, not just *quercetosum pubescentis*, in the *Aristolochio luteae-Quercetum pubescentis.* While it can be argued whether typical stands of the *Seslerio autumnalis-Ostryetum carpinifoliae* just form secondary succession stages of the *Aristolochio-Quercetum pubescentis*, they are nevertheless floristically, physiognomically and ecologically distinct. What is the syntaxonomical position of the *Aristolochio luteae-Quercetum pubescentis* and its relation to the *Seslerio autumnalis-Quercetum pubescentis*, *Seslerio autumnalis-Ostryetum carpinifoliae* and *Querco pubescenti-Carpinetum orientalis* remains to be answered by systematic and comprehensive investigation of this type of vegetation in the whole submediterranean eastern Adriatic region.

Asparago tenuifolii-Quercetum pubescentis is a specific type of *Quercus pubescens* forest without *Carpinus orientalis* and submediterranean elements (Table 2, column 7, Supplement S2), which is found on flat to moderate slopes on limestone and dolomite of the mountains of northern B&H (Fig. 2g). This association shows a certain similarity to Central European *Quercus pubescens* forests of *Quercion pubescenti-petraeae* (WILLNER & GRABHERR 2007, CHYTRÝ 2013) and *Fraxino orni-Quercenion pubescentis* (BORHIDI et al. 2012). A similar association was reported from Dilj Mt. (Slavonia, NE Croatia) (ŠKVORC 2006), so we think that further studies of this forest type should be continued, but with greater focus on similar communities from Hungary, Slovakia, Czech Republic and Austria.

The *Asparago-Quercetum* is spatially connected to the ***Querco pubescenti-Ostryetum carpinifoliae,*** which is found on very steep, rocky southern slopes of limestone and dolomite outcrops of the northern Bosnian mountains (Fig. 2j), and also in central B&H (STEFANOVIĆ 1964b, LAKUŠIĆ et al. 1982a). HORVAT (1950, 1963) states that this association can be found in N B&H and NW Croatia, but it is also present in Slovenia (ZUPANČIČ et al. 2009) and in NW Serbia (JOVANOVIĆ 1967). Stands on milder slopes with deeper soil were distinguished as subass. *quercetosum petraeae* (HORVAT 1938) and later raised to the level of association, ***Lathyro nigri-Quercetum petraeae*** (HORVAT 1959). According to the original diagnosis, this association corresponds to mesothermophilous *Quercus petraea* forests on deeper soils (Fig. 4). Thermophilous and basophilous species, including *Ostrya carpinifolia* are dominant in floristic composition, but also several neutrophilous species and those that are slight acidi-

ty indicators can occur (Table 5, column 1). Some authors (VUKELIĆ 1990, BARIČEVIĆ et al. 2006b) included some stands of acido-thermophilous forests of the *Festuco drymejae-Quercetum petraeae lathyretosum nigrae* within the scope of this association, which is in opposition to the traditional concept of this syntaxon. In B&H, this type of forest often forms an altitudinal belt beneath thermophilous beech forests (*Aceri obtusati-Fagetum*) (REDŽIĆ 1986).

In NW B&H, in the zone in which continental and mediterranean climates interface, one rather peculiar community occurs (Fig. 2n). It brings together two species that stand for two opposing ecologies: mesophilous *Carpinus betulus* and xerothermophilous *Carpinus orientalis*. This newly described association, ***Aceri obtusati-Quercetum petraeae,*** is regarded as a transitional association between thermophilous *Carpinion orientalis* and mesoneutrophilous *Carpinion betuli* (Table 5, column 2, Supplement S3). Similar communities had not previously been reported for B&H, probably because oak forests of this part of B&H were poorly studied in the past.

Pure *Ostrya carpinifolia* forests are represented by two associations, ***Seslerio autumnalis-Ostryetum carpinifoliae*** and ***Rusco aculeati-Ostryetum carpinifoliae***. The first is mainly considered to be a secondary succession stage either of *Aristolochio-Quercetum pubescentis* or *Seslerio-Fagetum* (TRINAJSTIĆ 1977, TRINAJSTIĆ & CEROVEČKI 1978, PUNCER & ZUPANČIČ 1982). Others consider it to be zonal (STEFANOVIĆ 1979a), or zonal only on steep dolomite slopes, where it is competitively stronger than *Quercus pubescens* or *Fagus sylvatica* (TRINAJSTIĆ 1977). Mesothermophilous *Rusco aculeati-Ostryetum carpinifoliae* (Fig. 4) develops as a permanent stage in the humid conditions of the canyons of W B&H, on very steep slopes over shallow and extremely rocky soil. It has been known from B&H and Serbia (STEFANOVIĆ 1964b, 1979a, TOMIĆ 2000, 2006) mainly under the pseudonym *Fraxino orni-Ostryetum carpinifoliae*. These communities are in spatial and syngenetic connection with polydominant ravine forests (STEFANOVIĆ 1979b).

In E B&H, with exclaves in central and southern areas of the country, the zonal central Balkan community of ***Quercetum frainetto-cerridis*** occurs (Fig. 2k). It can be considered to be zonal in E Bosnia (Transitional Illyrian-Moesian region), while in other parts it is extrazonal. This rather heterogenous association was originally described by RUDSKI (1949) for central Serbia, with three subassociations. Many subassociations and geographical variants were later described for the region of Serbia (JOVANOVIĆ & DUNJIĆ 1951, JOVANOVIĆ 1956, 1967, VUKIĆEVIĆ 1959). Their syntaxonomical status was not resolved until the present, since some authors gave them association status (JOVANOVIĆ 1997), while others only the status of geographical variants within *Quercetum frainetto-cerridis* (TOMIĆ & RAKONJAC 2013). As B&H authors treated it in the latter manner, we also accepted that view. Several variants have been reported in B&H (GLIŠIĆ 1956, FABIJANIĆ et al. 1967, STEFANOVIĆ & MANUŠEVA 1971, FUKAREK et al. 1974, STEFANOVIĆ 1988). This association was also reported from Croatia by TRINAJSTIĆ et al. (1996), who corrected its original illegitimate name "*Quercetum confertae-cerris serbicum"*. In the southern B&H, FUKAREK (1966) described *Quercetum frainetto hercegovinum*, but analysis could not separate it from other *Quercetum frainetto-cerridis* forests.

The association ***Fraxino orni-Quercetum cerridis*** is the main type of forest vegetation in dry karst fields of W. and S. B&H (Fig. 2l). This main area of distribution has radiations in Croatia (TRINAJSTIĆ 2008, VUKELIĆ 2012). The association was originally described by STEFANOVIĆ (1968) in western B&H but, over time, it was repeatedly described from different localities in western and southern B&H by different names (FUKAREK 1970a, LAKUŠIĆ et

al. 1978, LAKUŠIĆ & REDŽIĆ 1989, 1991, REDŽIĆ & BARUDANOVIĆ 2010, REDŽIĆ 2011). A similar association has been reported from Hungary, where it primarily occurs on limestone and dolomite, but also on basalt (KEVEY 2008, BORHIDI et al. 2012). Forests in Serbia that are attributed to this association (TOMIĆ et al. 2006, TOMIĆ & RAKONJAC 2013) are of different floristic composition and ecology and represent another community, i.e., *Quercetum cerris* (VUKIĆEVIĆ 1966).

Finally, we included in the vegetation of thermophilous deciduous forests acido-thermophilous *Quercus petraea* forests, for the reasons already discussed in the introduction. They show the lowest values of the soil pH expresed through the floristic composition (Fig. 4). ***Cytiso hirsuti-Quercetum petraeae,*** formerly known as *Quercetum montanum illyricum* (STEFANOVIĆ 1964a, 1984, STEFANOVIĆ & MANUŠEVA 1966, 1971, STEFANOVIĆ et al. 1977a), is related to zonal dry-acidophilous *Quercion petraeo-cerridis* of central Balkan (ČARNI et al. 2009). It is found on shallow dry soils of silicate bedrock (andesite, dacite, siliceous sandstone and schists) of E and C B&H, and Palaeozoic sediments (siliceous sandstone and schists) of N B&H (Fig. 2o). The association ***Festuco drymejae-Quercetum petraeae*** was originally described from Fruška gora (Serbia) (JANKOVIĆ & MIŠIĆ 1960, JANKOVIĆ 1968) and later reported from northern Croatia (HRUŠKA-DELL'UOMO 1975, BARIČEVIĆ et al. 2006a). Some stands from northern Croatia reported as *Lathyro nigri-Quercetum petraeae* also belong to this association (VUKELIĆ 1990, BARIČEVIĆ et al. 2006b). This association shows certain simmilarities to the slightly dryer and more acidophilous ***Potentillo micranthae-Quercetum petraeae*** (Fig. 4). It was originally described from Zrinska Gora (Croatia) (VUKELIĆ et al. 2010), but some stands from NW Croatia, of what was formerly known as meso-acidophilous *Hieracio racemosi-Quercetum petraeae* sensu Vukelić 1991 (VUKELIĆ 2012), also enter the scope of this association. The latter two associations comprise the group of north Dinaric-south Pannonian acido-thermophilous forests, which are widely distributed on siliceous low mountains and hills of peripannonian Croatia, B&H and Serbia. The association ***Seslerio autumnalis-Quercetum petraeae*** is known from only one locality in B&H (VOJNIKOVIĆ 2001; Fig. 2r). It is interesting that it is found here on ultrabasic gabbro bedrock, while in Croatia, Slovenia and Italy it occurs on flysch (POLDINI 1964, ZUPANČIČ 1999, VUKELIĆ 2012). While this association has an acido-thermophilous character, its submediterranean distribution made most authors include it in *Quercion pubescenti-petraeae* (VOJNIKOVIĆ 2001, TRINAJSTIĆ 2008, ŠILC & ČARNI 2012, VUKELIĆ 2012). More work is needed in B&H, as well in Croatia, in order to reveal its correct syntaxonomical position.

5.2 Problematic syntaxa

A thorough survey of the relevant literature yielded a list of syntaxa that had been reported for thermophilous deciduous forests of B&H, but could not be recognized during the analysis, either because they were mistakenly attributed to different syntaxa, or they do not belong to thermophilous deciduous forests, or there were no relevés in the database, or they simply do not exist on the territory of B&H.

Aceri paradoxi-Carpinetum orientalis Blečić et Lakušić 1967

The association of *Acer paradoxum* (= *Acer hyrcanum* subsp. *intermedium*) and *Carpinus orientalis* was originally described from the canyon of the Piva River in Montenegro (BLEČIĆ & LAKUŠIĆ 1967). This association has been reported from several sites in B&H

(LAKUŠIĆ & REDŽIĆ 1991), where this name was mistakenly ascribed to *Cruciato glabrae-Carpinetum orientalis* (*Carpinetum orientalis illyricum*). Field research in the area of eastern B&H did not confirm this association but, bearing in mind that Piva canyon forms the borderline between B&H and Montenegro, the existence of *Aceri–Carpinetum orientalis* should not be ruled out for the territory of B&H.

***Seslerio angustifoliae-Ostryetum carpinifoliae* Lakušić ex Lakušić et Redžić 1989**

Syn.: *Seslerio angustifoliae-Ostryetum carpinifoliae* Lakušić 1975 nom. ined. [Art. 1], *Seslerio angustifoliae-Ostryetum carpinifoliae* Lakušić et al. 1978 nom. nud. [Art. 2b], *Seslerio angustifoliae-Ostryetum carpinifoliae* Lakušić et al. 1982 nom. inval. [Art. 2b]

This association was reported for the river canyons around the city of Sarajevo (Miljacka, Željeznica and Prača), but without phytosociological relevés (LAKUŠIĆ et al. 1978). LAKUŠIĆ et al. (1982b) presented a synoptic table based on five relevés from the same localities. LAKUŠIĆ & REDŽIĆ (1989) eventually presented one relevé of this association, but from Derventa River canyon in western Serbia. The existence of this association in B&H is highly probable, but we did not conduct field research since these localities are mine contaminated.

***Carpino betuli-Ostryetum carpinifoliae* Lakušić et Redžić 1989**

This association was classified into thermophilous deciduous forests (REDŽIĆ 2011), but the only published relevé, together with the description (LAKUŠIĆ & REDŽIĆ 1989), suggest that this association belongs to ravine forests of *Tilio-Acerion*.

***Melampyro doerfleri-Ostryetum carpinifoliae* Lakušić et Redžić 1989**

Syn.: *Melampyro doerfleri-Ostryetum carpinifoliae* Lakušić 1968 nom. ined. [Art. 1]

Although REDŽIĆ (2011) listed this association for B&H, its occurence here is highly unlikely. The only relevé of this association was published from Montenegro (LAKUŠIĆ & REDŽIĆ 1989), and the species *Melampyrum doerfleri* is not reported for B&H.

***Corylo colurnae-Ostryetum carpinifoliae* Blečić 1958 nom. inval. [Art. 3b]**

This association could not be recognized from the data set. Some indications of its presence in B&H on Mt. Gatačka Bjelašnica (NE Herzegovina) were given by LAKUŠIĆ et al. (1978), but without relevés. It has been described from Montenegro, where it occurs at 1000–1200 m beneath beech-fir forests in karst sinkholes (BLEČIĆ 1958). It was designated as provisional, and its uncertain syntaxonomical position was pointed out. The herb layer for the most part consists of mesophilous species of beech-fir forests, while there are 16 species in the tree layer. It is probably connected to polydominant ravine forests of *Tilio-Acerion*.

Although without relevés, three associations of *Quercus trojana* forests were indicated for B&H (REDŽIĆ 2011): *Quercetum macedonicae* Em ex Horvat 1959, which was described from central Macedonia, *Quercetum trojanae montenegrinum* Blečić et Lakušić 1975 nom. nud. [Art. 2b], from south-eastern Montenegro, and *Pistacio-Quercetum trojanae* Redžić 2011 nom. nud. [Art. 2b]. However, although *Quercus trojana* is distributed in SE B&H, we could not confirm forests of it during the field research. It was found only as admixed spe-

cies in other associations (*Seslerio-Quercetum pubescentis, Rusco-Carpinetum orientalis, Seslerio-Ostryetum*), but this certainly does not mean that such forests should be ruled out for B&H.

Finally, we provide a list of *nomina nuda* that were obtained from the literature, but could not be ascribed to synonymy with any of the previously treated syntaxa: *Rusco aculeati-Quercetum mixtum* Stefanović 1977, *Fraxino orni-Quercetum dalechampii* Lakušić et al. 1978, *Frangulo rupestris-Ostryetum carpinifoliae* Redžić, Barudanović et Đug in Redžić 2007, *Coronillo-Fraxinetum orni* Redžić, Đug et Barudanović in Redžić 2007, *Aceri obtusati-Ostryetum carpinifoliae* Redžić 2007, *Aceri obtusati-Quercetum dalechampii* Redžić 2007, *Quercetum pubescentis-dalechampii* Redžić 2011, *Asparago officinali-Quercetum roboris* Redžić 2011, *Seslerio autumnalis-Quercetum pubescentis* Redžić 2011, *Carpino orientalis-Quercetum pubescentis* Redžić 2011, *Rusco-Quercetum pubescentis* Redžić 2011, *Ostryo-Quercetum petraeae* Redžić 2011, *Melampyro trichocalycinae-Carpinetum orientalis* Redžić 2011, *Seslerio autumnalis-Carpinetum orientalis* Redžić 2011.

Erweiterte deutsche Zusammenfassung

Einleitung – Thermophile Laubwälder der Ordnung *Quercetalia pubescentis* nehmen etwa 20% der Waldfläche und 11 % der Landesfläche von Bosnien und Herzegowina (B&H) ein. Trotz ihrer großen Bedeutung hinsichtlich Fläche und Diversität gibt es zahlreiche bisher ungelöste Probleme bei der Gliederung und Benennung dieser Wälder, hauptsächlich wegen der schlechten pflanzensoziologischen Bearbeitung (vor dieser Studie waren aus dem ganzen Land nur 274 Vegetationsaufnahmen dieser Ordnung publiziert worden, und einige Waldtypen waren noch nicht nachgewiesen worden) und wegen der ungeklärten syntaxonomischen und nomenklatorischen Fragen. Die Hauptziele dieser Studie: durch intensive Geländearbeit Bearbeitungslücken von thermophilen Laubwäldern in B&H füllen; die Vegetationsaufnahmen nach formalen Kriterien klassifizieren; die Gültigkeit und Legitimität der existierenden Namen der Pflanzengesellschaften prüfen und ihre Namen gemäß der Regeln des ICPN korrigieren und typisieren.

Methoden – Die Cocktail-Methode (BRUELHEIDE 2000) wurde verwendet, um alle 673 Vegetationsaufnahmen der *Quercetalia pubescentis* aus B&H nach formalen Kriterien zu klassifizieren. Auf der Basis von Expertenwissen stellten wir 18 soziologische Artengruppen zusammen, die in Kombination mit den Deckungsanteilen einiger Arten und verknüpft mit den logischen Operatoren Und, Oder und Nicht formale Definitionen von 17 Zielassoziationen ergaben. Zu ihnen gehörten 483 Vegetationsaufnahmen des Ausgangsdatensatzes. Um auch die übrigen Aufnahmen, die durch Cocktail nicht oder nicht eindeutig klassifiziert werden konnten, zuordnen zu können, benutzten wir das Prinzip einer „teilkontrollierten" Klassifikation („*semi-supervised classification*", TICHÝ et al. 2014). Treuemaße der Arten – dafür verwendeten wir den phi-Koeffizienten (CHYTRÝ et al. 2002) – waren die Berechnungsgrundlage für die diagnostischen Arten, die zur Qualitätsbeurteilung der formalen Definitionen benutzt wurden.

Bei der Nomenklatur der Pflanzengesellschaften wie auch bei der Beschreibung neuer Syntaxa folgen wir strikt den Regeln des ICPN (WEBER et al. 2000). Der korrekte Name jeder Assoziation wurde ermittelt und die gesamte Synonymie verzeichnet. Für noch nicht typisierte Syntaxa wurden Lektotypten beziehungsweise Neotypen ausgewählt. Für nach Art. 5 ICPN ungültige Syntaxonnamen wurden Holotypen bezeichnet. Eine modifizierte Namensform – z. B. *nomen mutatum* – wurde anstelle eines Syntaxonnamens verwendet, der ursprünglich nach Taxonnamen gebildet worden war, die nicht mehr im Einklang mit der gegenwärtigen taxonomischen und floristischen Literatur sind. Die Diagnosen der neuen Assoziationen werden begleitet von Beschreibungen und pflanzensoziologischen Tabellen mit Angabe des Holotypus.

Ergebnisse und Diskussion – Mittels der Cocktail-Methode ließen sich die thermophilen Laubwälder von B&H in 17 Zielassoziationen klassifizieren. Der „teilkontrollierte" Ansatz erbrachte zusätzlich eine weitere ökologisch und floristisch klar definierte Assoziation, welche als neu erkannt und als *Aceri obtusati-Quercetum petraeae* beschrieben wurde. Da es das Hauptziel dieser Arbeit war, die thermophilen Laubwälder von B&H formal zu klassifizieren, sind wir den Verbandszugehörigkeiten der Assoziationen nicht nachgegangen; dies bleibt einer geographisch breiter angelegten Studie jenseits unserer Fragestellung vorbehalten. Wir haben die Assoziationen stattdessen auf der Basis der dominierenden Baumarten gruppiert, um so Unterschiede in der Artenzusammensetzung von Assoziationen mit gleicher Hauptbaumart aufzuzeigen. Die Assoziationen gehören vier Gruppen an: (*i*) Assoziationsgruppe dominiert von *Quercus pubescens* und/oder *Carpinus orientalis*, (*ii*) Assoziationsgruppe dominiert von *Ostrya carpinifolia*, (*iii*) Assoziationsgruppe dominiert von *Quercus frainetto* und/oder *Quercus cerris* and (*iv*) Assoziationsgruppe dominiert von *Quercus petraea* agg.

Zusätzlich zu einer kurzen Beschreibung jeder Assoziation verdeutlichen Übersichtstabellen (Tabellen 2–5) die floristischen Unterschiede und Ähnlichkeiten zwischen den Assoziationen und Gruppen. Die Verteilung der Vegetationsaufnahmen der einzelnen Assoziationen zeigt eine Karte (Fig. 2). Die Höhenzonierung und die Verbreitung der Assoziationen in den biogeographischen Regionen von B&H wird in Figure 3 veranschaulicht. Die größte Zahl an Assoziationen (13) gibt es in der mediterranen Region; die dinarische und die prä-pannonische Region weisen jeweils 10 Assoziationen auf, während es in der illyrisch-moesischen Übergangsregion nur 5 Assoziationen sind. Die größte Höhenspanne – sie schließt die höchstgelegenen thermophilen Laubwälder ein – hat die mediterrane Region (130–1030 m), gefolgt von der dinarischen (310–1000 m), illyrisch-moesischen (190–880 m) und der prä-pannonischen Region (250–780 m). Figure 4 zeigt ein Ökogramm mit der relativen ökologischen Einnischung jeder Assoziation entlang von Bodenazidität und -feuchte. Gruppe *i* umfasst thermophil-basiphytische Wälder, Gruppe *ii* ist mesophil-basiphytisch, Gruppe *iii* intermediär, und Gruppe *iv* mesophil und tendenziell azidophytisch.

Syntaxonomische Synopsis:

Assoziationen dominiert von *Quercus pubescens* und/oder *Carpinus orientalis*

1. *Querco pubescenti-Carpinetum orientalis* Horvatić 1939
2. *Rusco aculeati-Carpinetum orientalis* Blečić et Lakušić 1967
3. *Carici hallerianae-Quercetum pubescentis* ass. nov. hoc loco
4. *Cruciato glabrae-Carpinetum orientalis* Šugar et Trinajstić ex Stupar et al. ass. nov. hoc loco
5. *Seslerio autumnalis-Quercetum pubescentis* Zupančič 1999
6. *Aristolochio luteae-Quercetum pubescentis* (Horvat 1959) Poldini 2008
7. *Asparago tenuifolii-Quercetum pubescentis* Lakušić et Redžić 1991

Assoziationen dominiert von *Ostrya carpinifolia*

8. *Seslerio autumnalis-Ostryetum carpinifoliae* Horvat et Horvatić ex Horvat 1959
9. *Rusco aculeati-Ostryetum carpinifoliae* Lakušić et Redžić ex Stupar et al. ass. nov. hoc loco
10. *Querco pubescenti-Ostryetum carpinifoliae* Horvat 1938

Assoziationen dominiert von *Quercus frainetto* und/oder *Quercus cerris*

11. *Quercetum frainetto-cerridis* (Rudski 1949) Trinajstić et al. 1996
12. *Fraxino orni-Quercetum cerridis* Stefanović 1968

Assoziationen dominiert von *Quercus petraea* agg.

13. *Lathyro nigri-Quercetum petraeae* Horvat (1938) 1959
14. *Aceri obtusati-Quercetum petraeae* ass. nov. hoc loco
15. *Cytiso hirsuti-Quercetum petraeae* (Stefanović 1964) Pallas in Bohn et Neuhäusl 2004
16. *Festuco drymejae-Quercetum petraeae* (Janković et Mišić 1960) Janković 1968
17. *Potentillo micranthae-Quercetum petraeae* Vukelić et al. ex Vukelić, Baričević et Šapić ass. nov. hoc loco
18. *Seslerio autumnalis-Quercetum petraeae* Poldini ex Poldini 1982

Obwohl diese Studie der thermophilen Laubwälder von B&H ein Schema ergeben hat, bei dem die Syntaxa in ökologischer und floristischer Hinsicht die pflanzensoziologischen Beziehungen innerhalb von B&H wie auch zu benachbarten Ländern widerspiegeln, bleiben eine Reihe von Problemen, denen man sich zuwenden sollte. Weitere Forschung ist insbesondere nötig, um die Diversitätsmuster der eher heterogenen Assoziationen *Quercetum frainetto-cerridis* und *Cruciato glabrae-Carpinetum orientalis* zu erhellen. Der syntaxonomische Status und die Umschreibung des *Aristolochio luteae-Quercetum pubescentis* bedürfen der Neubewertung.

Acknowledgements

We thank Jovan Travar and Davor Nikić for help during the field research. Special thanks are due to Jean-Paul Theurillat and Nicolas Fumeaux for substantial advices concerning syntaxonomy. Thanks are also due to Jovan Hadži Institute of Biology ZRC SAZU in Ljubljana (Slovenia) and the Forestry Faculty, University of Banja Luka (B&H) for logistic support. This research was carried out with financial support from the Slovenian Research Agency ARRS grant P1-0236 and bilateral grant *Vegetacija termofilnih hrastovih šuma pripanonskog područja Zapadnog Balkana* no. BI-BA/12-13-015.

Supplements

Supplement S1. *Carici hallerianae-Quercetum pubescentis* ass. nov. hoc loco, holotypus: relevé 4.

Beilage S1. *Carici hallerianae-Quercetum pubescentis* ass. nov. hoc loco, Holotypus: Aufnahme 4.

Supplement S2. *Asparago tenuifolii-Quercetum pubescentis*.

Beilage S2. *Asparago tenuifolii-Quercetum pubescentis*.

Supplement S3. *Aceri obtusati-Quercetum petraeae* ass. nov. hoc loco, holotypus: relevé 9.

Beilage S3. *Aceri obtusati-Quercetum petraeae* ass. nov. hoc loco, Holotypus: Aufnahme 9.

Additional supporting information may be found in the online version of this article.

Zusätzliche unterstützende Information ist in der Online-Version dieses Artikels zu finden.

Supplement E1. List of species merged to aggregates (agg.), broadly defined taxa (s.l.) or taxa deviating from TUTIN et al. (1968–1993) or not included therein.

Anhang E1. Liste der zu Aggregaten (agg.) zusammengefassten, weit definierten (s.l.) oder von TUTIN et al. (1968–1993) abweichenden bzw. dort nicht enthaltenen Taxa.

References

BARIČEVIĆ, D., VUKELIĆ, J., PERNAR, N. & BAKŠIĆ, D. (2006a): Acidotermofilne zajednice hrasta kitnjaka u šumskoj vegetaciji Požeškoga gorja (Acido-thermophilous communities of sessile oak in the forest vegetation of Požega hill area) [in Croatian]. – Glas. Šumske Pokuse Poseb. Izd. 5: 151–165.

BARIČEVIĆ, D., VUKELIĆ, J., PERNAR, N., BAKŠIĆ, D. & ŠANGO, M. (2006b): Association *Lathyro-Quercetum petraeae* I. Horvat (1938) 1958 in the Požega hill area and its comparison with other distribution areas in Croatia. – Period. Biol. 108: 683–692.

BAUER, E.-M. & BERGMEIER, E. (2011): The mountain woodlands of western Crete – plant communities, forest goods, grazing impact and conservation. – Phytocoenologia 41: 73–115.

BERGMEIER, E. & DIMOPOULOS, P. (2001): *Fagus sylvatica* forest vegetation in Greece: Syntaxonomy and gradient analysis. – J. Veg. Sci. 12: 109–126.

BERGMEIER, E. & DIMOPOULOS, P. (2008): Identifying plant communities of thermophilous deciduous forest in Greece: Species composition, distribution, ecology and syntaxonomy. – Plant Biosyst. 142: 228–254.

BLEČIĆ, V. (1958): Šumska vegetacija i vegetacija stijena i točila doline rijeke Pive (Vegetation of forests, rocks and screes in the Piva River basin) [in Serbo-Croatian]. – Glas. Prir. Muz. Beogr. Ser. B 11: 1–108.

BLEČIĆ, V. & LAKUŠIĆ, R. (1967): Niederwald und Buschwald der orientalischen Hainbuche in Montenegro. – Glas. Bot. Zavod. Bašt. Univ. Beogr. 2: 83–94.

BOHN, U. & NEUHÄUSL, R. (Eds.). (2004): Map of the natural vegetation of Europe. – Landwirtschaftsverlag, Münster: 512 pp.

BORHIDI, A., KEVEY, B. & LENDVAI, G. (2012): Plant communities of Hungary. – Akadémiai Kiadó, Budapest: 526 pp.

BRAUN-BLANQUET, J. (1961): Die inneralpine Trockenvegetation. – Fischer Verlag, Stuttgart: 273 pp.

BRAUN-BLANQUET, J. (1964): Pflanzensoziologie, Grundzüge der Vegetationskunde. 3. Aufl. – Springer, Wien: 865 pp.

BRUELHEIDE, H. (2000): A new measure of fidelity and its application to defining species groups. – J. Veg. Sci. 11: 167–178.

BRUJIĆ, J. (2013): Šumska vegetacija Čemernice (Forest vegetation of the Čemernica Mt.) [in Serbian]. – Ph.D. thesis, University in Banja Luka: 564 pp.

BUCALO, V. (1999): Šumske fitocenoze planine Jadovnik (Forest phytocoenoses of the Jdovnik Mt.) [in Serbian]. – Šumarski fakultet Univerziteta u Banjoj Luci, Beograd, RS: 326 pp.

ČARNI, A., KOŠIR, P., KARADŽIĆ, B., MATEVSKI, V., REDŽIĆ, S. & ŠKVORC, Ž. (2009): Thermophilous deciduous forests in Southeastern Europe. – Plant Biosyst. 143: 1–13.

CHYTRÝ, M. (1997): Thermophilous oak forests in the Czech Republic: Syntaxonomical revision of the *Quercetalia pubescenti-petraeae*. – Folia Geobot. Phytotaxon. 32: 221–258.

CHYTRÝ, M. (Ed.) (2007): Vegetace České republiky 1. Travinná a keříčková vegetace (Vegetation of the Czech Republic 1. Grassland and Heathland Vegetation) [in Czech, with English summaries]. – Academia, Praha: 525 pp.

CHYTRÝ, M. (Ed.) (2013): Vegetace České republiky 4. Lesní a křovinná vegetace (Vegetation of the Czech Republic 4. Forest and Scrub Vegetation) [in Czech, with English summaries]. – Academia, Praha: 552 pp.

CHYTRÝ, M., TICHÝ, L., HOLT, J. & BOTTA-DUKÁT, Z. (2002): Determination of diagnostic species with statistical fidelity measures. – J. Veg. Sci. 13: 79–90.

DELIJANIĆ, I., RADIČEVIĆ, D., SOKOLOVIĆ-ILIĆ, G., IVANOVIĆ, D., MILOŠEVIĆ, S. & SENIČAR, E. (1964): Klimatska rejonizacija Jugoslavije i tabelarni prikaz temperaturnih i pluviometrijskih karakteristika klimatskih reona Jugoslavije (Climatic reonization of Yugoslavia with tabulated overview of temperature and precipitation indices of climatic reons) [in Serbo-Croatian]. – Jugosl. Poljopr. Šumar. Cent. Beogr.: 121–138.

DENGLER, J., JANSEN, F., GLÖCKLER, F., PEET, R.K., DE CÁCERES, M., CHYTRÝ, M., EWALD, J., OLDELAND, J., LOPEZ-GONZALEZ, G., FINCKH, M., MUCINA, L., RODWELL, J.S., SCHAMINÉE, J.H.J. & SPENCER, N. (2011): The Global Index of Vegetation-Plot Databases (GIVD): a new resource for vegetation science. – J. Veg. Sci. 22: 582–597.

DI PIETRO, R., VISCOSI, V., PERUZZI, L. & FORTINI, P. (2012): A review of the application of the name *Quercus dalechampii*. – Taxon 61: 1311–1316.

FABIJANIĆ, B., BURLICA, Č., VUKOREP, I. & ŽIVANOV, N. (1967): Tipovi šuma na eocenskom flišu severne Bosne (Forest types on Eocene flysch of northern Bosnia) [in Serbo-Croatian]. – Rad. Šumar. Fak. Inst. Šumar. Sarajev. 12: 1–89.

FABIJANIĆ, B., FUKAREK, P. & STEFANOVIĆ, V. (1963): Lepenica: Pregled osnovnih tipova šumske vegetacije (Overview of basic types of forest vegetation in Lepenica) [in Serbo-Croatian]. – Naučn. Druš. BH Poseb. Izd. 3: 85–129.

FUKAREK, P. (1966): Das *Quercetum confertae hercegovinicum* im Narenta-Tal. – Angew. Pflanzensoziol. 18: 37–45.

FUKAREK, P. (1970a): Fitocenološka istraživanja i kartiranja šumskih i šibljačkih zajednica na hercegovačkim planinama Orjenu, Prenju i Čvrsnici (Phytosociological studies and mapping of forest and scrub communities on mountains in Herzegovina: Orjen, Prenj and Čvrsnica) [in Serbo-Croatian]. – Rad. Akad. Nauk. Umjet. BH Od. Prir. Mat. Nauk. 11: 175–229.

FUKAREK, P. (1970b): Šumske zajednice prašumskog rezervata Perućice u Bosni (Forest communities of the virgin forest reserve Perućica in Bosnia) [in Serbo-Croatian]. – Akad. Nauk. Umjet. BH Od. Prir. Druš. Nauk. Poseb. Izd. 15: 157–262.

FUKAREK, P. (1975): Sastav i porijeklo termofilne zajednice medunca i bjelograbića na području centralne Bosne (Composition and origin of thermophilous community of downy oak and oriental hornbeam in central Bosnia) [in Serbo-Croatian]. – God. Biol. Inst. Uni. Sarajev. 28: 93–100.

FUKAREK, P., FABIJANIĆ, B. & JANJIĆ, N. (1974): Nova nalazišta sladuna (*Quercus conferta* Kit.) u Bosni i Hercegovini (New finding places of Hungarian oak (*Quercus conferta* Kit.) in Bosnia and Herzegovina) [in Serbo-Croatian]. – In: Zbornik radova sa Simpozijuma povodom 100. godišnjice prve Jugoslovenske dendrologije Josifa Pančića Naučni skupovi Srpske akademije nauka i umjetnosti 1: 69–83. Srpska akademija nauka i umetnosti, Beograd.

GLIŠIĆ, M. (1956): Prilog poznavanju areala šuma hrastova cera i sladuna (*Quercetum confertae-cerris*, Rudski) u severo-istočnoj Bosni (Contribution to the knowledge of the distribution area of the forests of Hungarian and Turkey oaks (*Quercetum confertae-cerris*, Rudski) in northeastern Bosnia) [in Serbo-Croatian]. – Nar. Šumar 10: 21–26.

HADŽIABLAHOVIĆ, S. (2010): The vascular flora of Ćemovsko polje (Montenegro). – Nat. Monten. 9: 7–143.

HENNEKENS, S.M. & SCHAMINÉE, J.H.J. (2001): TURBOVEG, a comprehensive data base management system for vegetation data. – J. Veg. Sci. 12: 589–591.

HORVAT, I. (1933): Istraživanje vegetacije hercegovačkih i crnogorskih planina (Research of vegetation of mountains in Hercegovina and Montenegro) [in Serbo-Croatian]. – Ljetop. Jugosl. Akad. Znan. Umjet. 46: 101–113.

HORVAT, I. (1938): Biljnosociološka istraživanja šuma u Hrvatskoj (Phytosociological studies of forests in Croatia) [in Serbo-Croatian]. – Glas. Šumske Pokuse 6: 127–279.

HORVAT, I. (1941): Istraživanje vegetacije Biokova, Orjena i Bjelašnice (Research of vegetation of mountains Biokovo, Orjen and Bjelašnica) [in Serbo-Croatian]. – Ljetop. Jugosl. Akad. Znan. Umjet. 53: 163–172.

HORVAT, I. (1950): Šumske zajednice Jugoslavije (Forest communities of Yugoslavia) [in Serbo-Croatian]. – Institut za šumarska istraživanja Ministarstva šumarstva N.R. Hrvatske, Zagreb: 73 pp.

HORVAT, I. (1959): Sistematski odnosi termofilnih hrastovih i borovih šuma Jugoistočne Evrope (Systematic relations of thermophilous oak and pine forests of Southeastern Europe) [in Serbo-Croatian]. – Biol. Glas. 12: 1–40.

HORVAT, I. (1963): Šumske zajednice Jugoslavije (Forest communities of Yugoslavia) [in Serbo-Croatian]. – In: Šumarska enciklopedija 2: 560–590. Jugoslavenski leksikografski zavod, Zagreb.

HORVAT, I., GLAVAČ, V. & ELLENBERG, H. (1974): Vegetation Südosteuropas. – Fischer Verlag, Stuttgart: 767 pp.

HORVAT, I. & PAWLOWSKI, B. (1939): Istraživanje vegetacije planine Vranice (Research of vegetation of mountain Vranica) [in Serbo-Croatian]. – Ljetop. Jugosl. Akad. Znan. Umjet. 51: 149–152.

HORVATIĆ, S. (1939): Nastavak istraživanja vegetacije otoka Krka (Continuation of vegetation studies on the Krk island) [in Serbo-Croatian]. – Ljetop. Jugosl. Akad. Znan. Umjet. 51: 153–157.

HORVATIĆ, S. (1963): Vegetacijska karta otoka Paga s općim pregledom vegetacijskih jedinica hrvatskog primorja (Vegetation map of the Pag island with the general overview of the vegetation units of the Croatian coastal region) [in Serbo-Croatian]. – Jugoslovenska akademija znanosti i umjetnosti, Zagreb: 187 pp.

HRUŠKA-DELL'UOMO, K. (1975): Asocijacija *Festuco-Quercetum petraeae* (Jank. 1968 nom. nud.) na Moslovačkoj gori u Hrvatskoj (Association *Festuco-Quercetum petraeae* (Jank. 1968 nom. nud.) on Moslovačka gora Mt in Croatia) [in Serbo-Croatian]. – Acta Bot. Croat. 34: 91–102.

INDREICA, A. (2012): Vegetation classification of acidophytic oak forests of Romania. – Phytocoenologia 42: 221–230.

JANKOVIĆ, M.M. (1968): Biljni pokrivač Srbije (Flora i vegetacija) (Plant cover of Serbia (Flora and vegetation)) [in Serbo-Croatian]. – In: Enciklopedija Jugoslavije 7: 645–659. Jugoslavenski leksikografski zavod, Zagreb.

JANKOVIĆ, M.M. & MIŠIĆ, V. (1960): Šumska vegetacija Fruške Gore (Forest vegetation of Fruška Gora Mt.) [in Serbo-Croatian]. – Zb. Matice Srp. Prir. Nauk. 19: 26–97.

JOVANOVIĆ, B. (1956): O klimatogenoj šumi jugoistočne Srbije (On climatogenous forest of southeastern Serbia) [in Serbo-Croatian]. – Zb. Rad. Inst. Ekol. Biogeogr. 7: 3–35.

JOVANOVIĆ, B. (1967): Neke šumske fitocenoze severozapadne Srbije (Some forest phytocoenoses of northwestern Serbia) [in Serbo-Croatian]. – Zb. Rad. Inst. Šumar. Drv. Ind. Beogr. 6: 19–72.

JOVANOVIĆ, B. (1997): Razred evrosibirskih listopadnih šuma, red medunčevih šuma (Class of of Eurosiberian deciduous forests, order of Pubescent oak forests) [in Serbian]. – In: SARIĆ M.R. (Ed.): Vegetacija Srbije II - Šumske zajednice 1: 1–106. Srpska akademija nauka i umetnosti, Odeljenje prirodno-matematičkih nauka, Beograd.

JOVANOVIĆ, B. & DUNJIĆ, R. (1951): Prilog poznavanju fitocenoza hrastovih šuma Jasenice i okoline Beograda (Contribution to the knowledge of the oak forests phytocoenoses of Jasenica and surroundings of Belgrade) [in Serbo-Croatian]. – Zb. Rad. Inst. Ekol. Biogeogr. Srp. Akad. Nauk. 2: 203–230.

JOVANOVIĆ, B., LAKUŠIĆ, R., RIZOVSKI, R., TRINAJSTIĆ, I. & ZUPANČIČ, M. (1986): Prodromus phytocoenosum Jugoslaviae ad mappam vegetationis m 1 : 200 000. – Naučno veće vegetacijske karte Jugoslavije, Bribir-Ilok: 46 pp.

KASPROWICZ, M. (2010): Acidophilous oak forests of the Wielkopolska region (West Poland) against the background of Central Europe. – Biodivers. Res. Conserv. 20: 1–138.

KEVEY, B. (2008): Magyarország erdőtársulásai (Forest associations of Hungary) [in Hungarian]. – Nyugat-Magyarországi Egyetem Erdőmérnöki Kar Növénytani Tanszék, Sopron: 489 pp.

KOČÍ, M., CHYTRÝ, M. & TICHÝ, L. (2003): Formalized reproduction of an expert-based phytosociological classification: A case study of subalpine tall-forb vegetation. – J. Veg. Sci. 14: 601–610.

LAKUŠIĆ, R., PAVLOVIĆ, D., ABADŽIĆ, S. & GRGIĆ, P. (1978): Prodromus biljnih zajednica Bosne i Hercegovine (Prodrome of plant communities of Bosni and Herzegovina) [in Serbo-Croatian]. – God. Biol. Inst. Uni. Sarajev. 30: 5–88.

LAKUŠIĆ, R., PAVLOVIĆ, D., ABADŽIĆ, S., KUTLEŠA, L. & MIŠIĆ, L. (1982a): Ekosistemi planine Vlašić (Ecosystems of the Vlašić Mt.) [in Serbo-Croatian]. – Bilt. Druš. Ekol. BH Ser. A Ekol. Monogr. 1: 1–131.

LAKUŠIĆ, R., PAVLOVIĆ, D. & REDŽIĆ, S. (1982b): Horološko-ekološka i floristička diferencijacija šuma i šikara sa bjelograbićem (*Carpinus orientalis* Mill.) i crnim grabom (*Ostrya carpinifolia* Scop.) na prostoru Jugoslavije (Chorological, ecological and floristic differentiation of forests and scrub with oriental hornbeam (*Carpinus orientalis* Mill.) and hop hornbeam (*Ostrya carpinifolia* Scop.) in the area of Yugoslavia) [in Serbo-Croatian]. – Glas. Repub. Zavod. Zašt. Prir. Prir. Muz. Titogr. 15: 103–116.

LAKUŠIĆ, R. & REDŽIĆ, S. (1989): Flora i vegetacija vaskularnih biljaka u refugijalno-reliktnim ekosistemima kanjona rijeke Drine i njenih pritoka (Flora and vegetation of vascular plants in the refugial and relict ecosystems of the canyons of River Drina and its tributaries) [in Serbo-Croatian]. – Glas. Od. Prir. Nauk. Crnog. Akad. Nauk. Umjet. Titogr. 7: 107–206.

LAKUŠIĆ, R. & REDŽIĆ, S. (1991): Vegetacija refugijalno-reliktnih ekosistema sliva rijeke Une (Vegetation of refugial and relict ecosystems of the River Una basin) [in Serbo-Croatian]. – Bilt. Druš. Ekol. BH Ser. B 6: 25–73.

LAKUŠIĆ, R., REDŽIĆ, S., MURATSPAHIĆ, D. & OMEROVIĆ, S. (1987): Struktura i dinamika fitocenoza na trajnim plohama Nacionalnog parka Sutjeska (Structure and dynamics of phytocoenoses on permanent plots in Sutjeska National park) [in Serbo-Croatian]. – Bilt. Druš. Ekol. BH Ser. A Ekol. Monogr. 4: 29–105.

LUBARDA, B., STUPAR, V., MILANOVIĆ, Đ. & STEVANOVIĆ, V. (2014): Chorological characterization and distribution of the Balkan endemic vascular flora in Bosnia and Herzegovina. – Bot. Serb. 38: 167–184.

MUELLER-DOMBOIS, D. & ELLENBERG, H. (1974): Aims and methods of vegetation ecology. – John Wiley & Sons, New York: 547 pp.

MURATSPAHIĆ, D., REDŽIĆ, S. & LAKUŠIĆ, R. (1991): Asocijacija *Rusco-Carpinetum orientalis* Blečić. et Lkšić 1966 u dolini rijeke Neretve (Association *Rusco-Carpinetum orientalis* Blečić. et Lkšić 1966 in the Neretva River valley) [in Serbo-Croatian]. – Glas. Repub. Zavod. Zašt. Prir. Prir. Muz. Podgor. 24: 7–12.

NARDI, E. (1984): The genus «*Aristolochia*» L. (*Aristolochiaceae*) in Italy. – Webbia 38: 221–300.

PIGNATTI, S., MENEGONI, P. & PIETROSANTI, S. (2005): Valori di bioindicazione delle piante vascolari della flora d'Italia. – Braun-Blanquetia 39: 1–97.

POLDINI, L. (1964): Die Wald- und Wiesenvegetation auf Flyschboden am Triester Golf. – Acta Bot. Croat. izvanredni svezak: 95–98.

POLDINI, L. (1982): *Ostrya carpinifolia* - reiche Wälder und Gebüsche von Julisch-Venezien (NO-Italien) und Nachbargebieten. – Stud. Geobot. 2: 69–122.

POLDINI, L. (1989): La vegetazione del Carso Isontino e Triestino. – Edizioni Lint, Trieste: 313 pp.

POLDINI, L. (2008): Nomenklatorische Berichigung von *Ostryo-Quercetum pubescentis* (Horvat 1959) Trinajstić 1977. – Hacquetia 7: 173–174.

PUNCER, I. & ZUPANČIČ, M. (1982): Die ökologishe und wirtschafliche Bedeutung der *Ostrya carpinifolia* Scop. in Slowenien. – Stud. Geobot. 2: 25–32.

REDŽIĆ, S. (1986): Prilog poznavanju šumskih fitocenoza planine Čemernice (Contribution to the knowledge of forest phytocoenoses of the Čemernica Mt.) [in Serbo-Croatian]. – God. Biol. Inst. Uni. Sarajev. 39: 125–139.

REDŽIĆ, S. (2007): The syntaxonomy of the vegetation of the continental Dinaric Alps (W. Balkans). – In: Collection of Papers Devoted to Academician Kiril Micevski: 249–280. Macedonian Academy of Sciences and Arts, Skopje.

REDŽIĆ, S. (2011): Vegetacija ekosustava toploljubivih šuma i šikara u Bosni i Hercegovini (Vegetation of the ecosystems of thermophilous forests and scrubs in Bosnia and Herzegovina) [in Croatian]. – Hrvat. Misao 3/10: 26–46.

REDŽIĆ, S. & BARUDANOVIĆ, S. (2010): The patterns of diversity of forest vegetation of the Crvanj Mountain in the Herzegovina (west Balkan Peninsula). – Šumar. List 134: 261–274.

REGULA-BEVILACQUA, L. (1978): Biljni pokrov Strahinščice u Hrvatskom zagorju (Plant cover of Strahinščica Mt. in Croatian Zagorje) [in Serbo-Croatian]. – Ph.D. thesis, University in Zagreb.

RODRÍGUEZ-ROJO, M.P., FERNÁNDEZ-GONZÁLEZ, F., TICHÝ, L. & CHYTRÝ, M. (2014): Vegetation diversity of mesic grasslands (*Arrhenatheretalia*) in the Iberian Peninsula. – Appl. Veg. Sci. 17: 780–796.

ROLEČEK, J. (2007): Formalized classification of thermophilous oak forests in the Czech Republic: what brings the Cocktail method? – Preslia 79: 1–21.

RUDSKI, I. (1949): Tipovi lišćarskih šuma jugoistočnog dela Šumadije (Types of broadleaved forests ofthe southeastern part of Šumadija) [in Serbo-Croatian]. – Prir. Muz. Srp. Zem. Beogr. 25: 67.

SARIĆ, M.R. (Ed.). (1997): Vegetacija Srbije 2 - Šumske zajednice 1 (Vegetation of Serbia 2 - Forest communities 1) [in Serbian with English summaries]. – Srpska akademija nauka i umetnosti, Odeljenje prirodno-matematičkih nauka, Beograd: 474 pp.

ŠILC, U. & ČARNI, A. (2007): Formalized classification of the weed vegetation of arable land in Slovenia. – Preslia 79: 283–302.

ŠILC, U. & ČARNI, A. (2012): Conspectus of vegetation syntaxa in Slovenia. – Hacquetia 11: 113–164.

ŠKORIĆ, D.M. (Ed.). (2006): Vegetacija Srbije 2 - Šumske zajednice 2 (Vegetation of Serbia 2 - Forest communities 2) [in Serbian with English summaries]. – Srpska akademija nauka i umetnosti, Odeljenje hemijskih i bioloških nauka, Beograd: 369 pp.

ŠKVORC, Ž. (2006): Florističke i vegetacijske značajke šuma Dilja (Floristic and vegetation characteristics of the forests of Dilj) [in Croatian]. – Ph.D. thesis, University in Zagreb, Zagreb: 221 pp.

STEFANOVIĆ, V. (1964a): Šumska vegetacija na verfenskim pješčarima i glincima istočne i jugoistočne Bosne (Forest vegetation on Werfen sandstones and shales of eastern and southeastern Bosnia) [in Serbo-Croatian]. – Rad. Šumar. Fak. Inst. Šumar. Drv. Ind. Sarajev. 9: 1–86.

STEFANOVIĆ, V. (1964b): Šumska vegetacija šireg područja Trebevića (Forest vegetation of the wider area of Trebević Mt.) [in Serbo-Croatian]. – Rad. Naučn. Druš. BH 25: 57–153.

STEFANOVIĆ, V. (1968): Fitocenoza cera (*Orno-Quercetum cerris*, ass. n.) i njeno biljnogeografsko mjesto u vegetaciji zapadne Bosne i šireg područja Dinarida (Phytocoenosis of Turkey oak (*Orno-Quercetum cerris*, ass. n.) and its phytogeographical position in the vegetation of western Bosnia and wider area of Dinaric Alps) [in Serbo-Croatian]. – Glas. Zemalj. Muz. BH Prir. Nauk. Nov. Ser. 7: 219–229.

STEFANOVIĆ, V. (1979a): Der zoenologische und syngenetische Charakter der Hopfenbuche (*Ostrya carpinifolia* Scop.) in der Phytozoenosen Jugoslawiens. – God. Biol. Inst. Uni. Sarajev. 32: 147–153.

STEFANOVIĆ, V. (1979b): Fitocenoza javora i lipa (*Aceri-Tilietum mixtum*, Stef., 1974) u nekim kanjonima Dinarida (Phytocoenosis of maples and lindens (*Aceri-Tilietum mixtum*, Stef., 1974) in some canyons of Dinarides) [in Serbo-Croatian]. – In: Drugi kongres ekologa Jugoslavije 2: 1083–1102. Savez društava ekologa Jugoslavije, Zadar-Plitvice.

STEFANOVIĆ, V. (1983): Das Zoenoareal der orientalischen Weissbuche (*Carpinus orientalis* Mill.) in Jugoslawien. – Glas. Zemalj. Muz. BH Prir. Nauk. Nov. Ser. 22: 55–63.

STEFANOVIĆ, V. (1984): Cenohorološki odnosi kitnjakovih šuma (*Quercetum petraeae* sens. lat.) u Bosni i Hercegovini (Coenochorological relations of the sessile oak forests (*Quercetum petraeae* sens. lat.) in Bosnia and Herzegovina) [in Serbo-Croatian]. – In: Bilten Društva ekologa BiH, serija B, Naučni skupovi i savjetovanja 2, III Kongres Ekologa Jugoslavije, Radovi i rezimea 1: 203–210. Društvo ekologa Bosne i Hercegovine, Sarajevo.

STEFANOVIĆ, V. (1988): Cenohorološki odnosi hrasta sladuna (*Quercus frainetto* Ten.) na sjeverozapadnoj granici areala u Bosni (Coenochorological relations of the Hungarian oak (*Quercus frainetto* Ten.) at the northwestern border of its areal in Bosnia) [in Serbo-Croatian]. – In: Zbornik referata naučnog skupa "Minerali, stijene, izumrli i živi svijet BiH": 375–385. Zemaljski muzej Bosne i Hercegovine, Sarajevo.

STEFANOVIĆ, V. (1989): Prilog poznavanju fitogeografskih i fitocenoloških odnosa bjelograbovih šuma izvan klimazonalnog areala u Bosni (Contribution to the knowledge of phytogeographical and phytocoenological relations of the forests of oriental hornbeam outside of its climatogenous areal in Bosnia) [in Serbo-Croatian]. – Glas. Zemalj. Muz. BH Prir. Nauk. Nov. Ser. 28: 103–119.

STEFANOVIĆ, V., BEUS, V., BURLICA, Č., DIZDAREVIĆ, H. & VUKOREP, I. (1983): Ekološko-vegetacijska rejonizacija Bosne i Hercegovine (Ecological and vegetational reonization of Bosnia and Herzegovina) [in Serbo-Croatian]. – Šumar. Fak. Sarajev. Poseb. Izd. 17: 1–49.

STEFANOVIĆ, V., BEUS, V., MANUŠEVA, L., PAVLIČ, J., PETROVIĆ, M. & VUKOREP, I. (1977a): Tipovi šuma hrasta kitnjaka u Bosni i Hercegovini (Types of the sessile oak forests in Bosnia and Herzegovina) [in Serbo-Croatian]. – Rad. Šumar. Fak. Inst. Šumar. Sarajev. 20: 3–91.

STEFANOVIĆ, V., BURLICA, Č., DIZDAREVIĆ, H., FABIJANIĆ, B. & PROLIĆ, N. (1977b): Tipovi niskih degradiranih šuma submediteranskog područja Hercegovine (Types of low degraded forests of submediterranean Herzegovina) [in Serbo-Croatian]. – Šumar. Fak. Inst. Sarajev. Poseb. Izd. 11: 3–130.

STEFANOVIĆ, V. & MANUŠEVA, L. (1966): Šumska vegetacija i zemljišta na perm-karboskim pješčarima i škriljcima u Bosni (Forest vegetation and soils on Perm-Carboniferous sandstones and schists in Bosnia) [in Serbo-Croatian]. – Rad. Šumar. Fak. Inst. Šumar. Sarajev. 11: 4–95.

STEFANOVIĆ, V. & MANUŠEVA, L. (1971): Šumska vegetacija i zemljišta na andezitu i dacitu istočne Bosne (Forest vegetation and soils on andesite and dacite of eastern Bosnia) [in Serbo-Croatian]. – Rad. Šumar. Fak. Inst. Šumar. Sarajev. 15: 1–83.

ŠUGAR, I. (1972): Biljni svijet Samoborskog gorja (Plant life of Samoborsko gorje) [in Serbo-Croatian]. – Ph.D. thesis, University in Zagreb: 325 pp.

ŠUGAR, I. & TRINAJSTIĆ, I. (1988): Prilog poznavanju bjelograbovih šuma u Hrvatskoj (Contribution to the knowledge of the forests of oriental hornbeam in Croatia) [in Serbo-Croatian]. – Poljopr. Šumar. Titogr. 34: 43–51.

SURINA, B. (2014): Forest vegetation of tectonic dolines Pihlja and Vitra above the Vinodol valley (Liburnian karst, NW Croatia). – Šumar. List 138: 259–269.

TICHÝ, L. (2002): JUICE, software for vegetation classification. – J. Veg. Sci. 13: 451–453.

TICHÝ, L. & CHYTRÝ, M. (2006): Statistical determination of diagnostic species for site groups of unequal size. – J. Veg. Sci. 17: 809–818.

TICHÝ, L., CHYTRÝ, M. & BOTTA-DUKÁT, Z. (2014): Semi-supervised classification of vegetation: preserving the good old units and searching for new ones. – J. Veg. Sci. 25: 1504–1512.

TOMIĆ, Z. (2000): Zajednica *Orno-Ostryetum* Aich. 1933 u refugijumima jugozapadne Srbije (Association *Orno-Ostryetum* Aich. 1933 in refugiums of southwestern Serbia) [in Serbian]. – Glas. Šumar. Fak. Beogr. 82: 177–189.

TOMIĆ, Z. (2006): Šume crnog graba (Hop hornbeam forests) [in Serbian with English summaries]. – In: ŠKORIĆ D.M. (Ed.): Vegetacija Srbije 2 - Šumske zajednice 2: 29–68. Srpska akademija nauka i umetnosti, Odeljenje hemijskih i bioloških nauka, Beograd.

TOMIĆ, Z., JOVANOVIĆ, B. & JANKOVIĆ, M.M. (2006): Mezotermne šume kitnjaka i cera (Mesothermophilous forests of Turkey and sessile oaks) [in Serbian with English summaries]. – In: ŠKORIĆ D.M. (Ed.): Vegetacija Srbije 2 - Šumske zajednice 2: 69–114. Srpska akademija nauka i umetnosti, Odeljenje hemijskih i bioloških nauka, Beograd.

TOMIĆ, Z. & RAKONJAC, L. (2013): Šumske fitocenoze Srbije: Priručnik za šumare, ekologe i biologe (Forest phytocoenoses of Serbia: Manual for foresters, ecologists and biologists) [in Serbian]. – Univerzitet Singidunum, Fakultet za primenjenu ekologiju Futura i Institut za šumarstvo, Beograd: 177 pp.

TREGUBOV, S.S. (1941): Les forêts vierges montagnardes des Alpes Dinariques - Massif de Klekovatcha-Guermetch (Virgin mountain forests of Dinaric Alps – massifs of Klekovača and Grmeč) [in French]. – Causse, Graille et Castelnau, Montpellier: 180 pp.

TRINAJSTIĆ, I. (1977): O vegetacijskoj granici mediteranske regije na primorskoj padini Dinarida (About vegetation boundry of the mediterranean region on the coastal foothills of Dinaric Alps) [in Serbo-Croatian]. – Poljopr. Šumar. Titogr. 23: 1–11.

TRINAJSTIĆ, I. (2008): Biljne zajednice Republike Hrvatske (Plant communities of Republic of Croatia) [in Croatian]. – Akademija šumarskih znanosti, Zagreb: 179 pp.

TRINAJSTIĆ, I. & CEROVEČKI, Z. (1978): O cenoarealu crnoga graba, *Ostrya carpinifolia* Scop. (*Corylaceae*) u Hrvatskoj (On coenoareal of hop-hornbeam, *Ostrya carpinifolia* Scop. (*Corylaceae*) in Croatia) [in Serbo-Croatian]. – Biosistematika 4: 57–65.

TRINAJSTIĆ, I., FRANJIĆ, J., SAMARDŽIĆ, J. & SAMARDŽIĆ, I. (1996): Fitocenološke značajke šuma sladuna i cera (as. *Quercetum frainetto-ceris* Rudski 1949) u Slavoniji (Hrvatska) (Phytosociological characteristics of the forests of Hungarian and Turkey oaks (as. *Quercetum frainetto-ceris* Rudski 1949) in Slavonia (Croatia)) [in Croatian]. – Šumar. List 120: 299–306.

TSIRIPIDIS, I., BERGMEIER, E. & DIMOPOULOS, P. (2007): Geographical and ecological differentiation in Greek *Fagus* forest vegetation. – J. Veg. Sci. 18: 743–750.

TUTIN, T.G., HEYWOOD, V.H., BURGES, N.A., MOORE, D.M., VALENTINE, D.H., WALTERS, S.M. & WEBB, D.A. (Eds.) (1968–1993): Flora Europaea. – Cambridge University Press, Cambridge.

VELIĆ, I. & VELIĆ, J. (1983): Petrografska karta SFR Jugoslavije (Petrographical map of SFR Yugoslavia) [in Serbo-Croatian]. – In: Šumarska enciklopedija 2: 624. Jugoslavenski leksikografski zavod, Zagreb.

VOJNIKOVIĆ, S. (2001): Fitocenoze kitnjaka (*Q. petraea* (Matt.) Liebl.) na gabru u području Jablanice (Phytocoenoses of sessile oak (*Q. petraea* (Matt.) Liebl.) on gabbro in the area of Jablanica) [in Bosnian]. – Master's thesis, University in Sarajevo: 62 pp.

VUKELIĆ, J. (1990): A supplement to the research on the sessile-flowered oak and black pea phytocoenosis (*Lathyro-Quercetum petraeae* Horv. /1938/ 1958) in northwest Croatia. – Ann. For. 16: 23–38.

VUKELIĆ, J. (2012): Šumska vegetacija Hrvatske (Forest vegetation of Croatia) [in Croatian with English summaries]. – Šumarski fakultet, Sveučilište u Zagrebu, DZZP, Zagreb: 403 pp.

VUKELIĆ, J., BARIČEVIĆ, D. & ŠAPIĆ, I. (2010): Nomenclatural-phytocoenological analysis of the association *Potentillo micranthae-Quercetum petraeae* ass. nova in Croatia. – Hacquetia 9: 5–18.

VUKIĆEVIĆ, E. (1959): Šumske fitocenoze u neplavljenom području Posavine (Forest phytocoenoses in nonflooded area of Posavina) [in Serbo-Croatian]. – Glas. Šumar. Fak. Beogr. 16: 381–399.

VUKIĆEVIĆ, E. (1966): Šumske fitocenoze Cera (Forest phytocoenoses of Cer Mt.) [in Serbo-Croatian]. – Glas. Muz. Šum. Lova 6: 95–124.

WEBER, H.E., MORAVEC, J. & THEURILLAT, J.-P. (2000): International Code of Phytosociological Nomenclature. 3rd ed. – J. Veg. Sci. 11: 739–768.

WILLNER, W. & GRABHERR, G. (Eds.). (2007): Die Wälder und Gebüsche Österreichs: Ein Bestimmungswerk mit Tabellen (in zwei Bänden). – Spektrum Akademischer Verlag, Heildelberg: 608 pp.

WRABER, M. (1958): Biljnosociološki prikaz kestenovih šuma Bosne i Hercegovine (Phytosociological overview of the sweet chestnut forests of Bosnia and Herzegovina) [in Serbo-Croatian]. – God. Biol. Inst. Uni. Sarajev. 9: 139–182.

ZUPANČIČ, M. (1999): Novosti o gozdno-grmiščni vegetaciji slovenskega submediterana (News about forest and scrub vegetation of the Slovenian submediterranean) [in Slovenian]. – Razprave 40: 195–313.

ZUPANČIČ, M., ŽAGAR, V. & VREŠ, B. (2009): The association *Querco-Ostryetum* Ht. 1938 in Slovenia. – Folia Biol. Geol. 50: 127–188.

Supplement S1. *Carici hallerianae-Quercetum pubescentis* ass. nov. hoc loco, holotypus: relevé 4 (A - lower tree layer, B - shrub layer, C - herb layer.

Beilage S1. *Carici hallerianae-Quercetum pubescentis* ass. nov. hoc loco, Holotypus: Aufnahme 4 (A - untere Baumschicht, B - Strauchschicht, C - Krautschicht

Relevé number		1	2	3	4	5	6	7	8	9	10
Characteristic species of the association											
Quercus pubescens	A	3	4	2	4	3	2	4	2	3	4
	B	2	2	2	2	1	1	2	2	2	+
Carpinus orientalis	A	.	.	.	.	.	.	3	.	.	.
	B	2	2	3	3	2	4	2	4	2	4
Sesleria autumnalis	C	3	4	4	3	2	3	3	3	.	3
Carex halleriana	C	r	+	+	1	+	+	.	+	.	2
Carpinion orientalis											
Acer monspessulanum	A	.	.	.	.	.	.	1	.	.	.
	B	.	.	2	.	1	1	1	2	.	+
Lonicera etrusca	B	+	+	.	+	1	.	1	+	.	.
Coronilla emerus s.l.	B	+	.	r	.	+	1	+	+	.	.
Hieracium tommasinianum	C	+	.	.	r	+	.	+	.	.	.
Quercetalia pubescentis											
Fraxinus ornus	A	.	+	.	.	.	1	2	.	2	.
	B	2	.	2	2	2	+	2	2	2	2
Quercus cerris	A	1	.	.	.	.	1	.	1	.	.
	B	2	.	2	2	.	2	.	2	.	.
Cornus mas	B	.	.	2	r	1	+	.	2	.	+
Euonymus verrucosus	B	.	.	+	.	+	+	r	1	.	1
Sorbus torminalis	B	.	.	+	r	2	.	+	.	.	+
Acer obtusatum	B	.	.	2	.	.	.	.	.	.	2
Viola hirta agg.	C	r	+	+	+	+	+	r	+	r	.
Campanula persicifolia	C	+	+	+	+	.	+	.	.	.	+
Silene nutans	C	r	+	.	r	.	1	.	.	.	r
Clinopodium vulgare	C	.	.	+	.	.	1	.	+	.	+
Buglossoides purpurocaerulea	C	.	.	1	.	1	+	.	+	.	.
Tanacetum corymbosum	C	+	.	+	.	.	.	.	+	r	.
Tamus communis	C	.	.	.	.	+	.	+	.	r	1
Lathyrus niger	C	.	.	+	r	.	1	.	.	.	.
Asperula purpurea	C	.	.	.	+	+	.	1	.	.	.
Campanula bononiensis	C	.	.	.	.	+	r	.	+	.	.
Querco-Fagetea* and *Rhamno-Prunetea											
Crataegus monogyna	B	+	.	+	+	+	1	1	+	r	+
Rosa arvensis	B	.	.	+	+	r	+	+	.	+	.
Acer campestre	B	r	.	.	.	.	2	.	+	.	+
Ligustrum vulgare	B	.	.	+	.	.	.	.	+	.	+
Cruciata glabra	C	r	+	+	.	.	+	.	r	.	1
Dactylis glomerata s.l.	C	.	.	+	.	.	.	+	+	r	1
Veronica chamaedrys	C	.	.	.	+	+	.	+	.	.	+
Brachypodium sylvaticum	C	+	.	.	.	.	.	+	.	.	1
Trifolio-Geranietea											
Trifolium alpestre	C	+	r	r	+	.	.	.	.	.	r
Dorycnium pentaphyllum subsp. *germanicum*	C	1	.	.	.	.	+	.	+	1	.
Helleborus multifidus	C	+	+	.	.	.	r	.	r	.	.
Polygonatum odoratum	C	.	.	+	.	.	.	.	.	1	r
Festuco-Brometea											
Teucrium chamaedrys	C	+	+	+	+	+	r	+	+	+	.
Brachypodium pinnatum s.l.	C	2	.	1	1	.	2	+	1	2	1
Bromus erectus agg.	C	1	.	.	+	+	+	1	+	3	.
Festuca pseudovina agg.	C	.	2	+	+	+	+	+	.	+	.
Asperula cynanchica	C	r	.	.	r	+	.	+	r	+	.
Carex humilis	C	.	+	.	.	+	2	2	+	.	.
Euphorbia cyparissias	C	.	.	r	.	.	+	r	.	+	.
Genista sylvestris subsp. *dalmatica*	C	.	+	.	.	+	.	1	.	.	.
Lotus corniculatus	C	+	.	.	+	r	.	.	.	.	.
Thymus pulegioides	C	.	r	.	.	.	.	.	r	+	.
Helianthemum nummularium	C	.	.	.	.	.	+	.	r	+	.
Companions											
Chamaecytisus hirsutus agg.	B	.	.	.	+	.	.	1	+	+	.
Fragaria vesca	C	.	+	+	1	+	+	.	+	.	.
Elymus repens	C	.	.	.	.	1	.	+	r	.	.

In one or two relevés:

A: *Ostrya carpinifolia* 9:+;

B: *Acer tataricum* 1:+; *Clematis vitalba* 3:r, 7:+; *Colutea arborescens* 10:+; *Cornus sanguinea* 1:+; *Corylus avellana* 2:1; *Cotinus coggygria* 3:1, 10:2; *Frangula rupestris* 5:+, 7:+; *Genista tinctoria* 3:r; *Juglans regia* 1:r; *Juniperus communis* 10:r; *Lonicera xylosteum* 6:r; *Ostrya carpinifolia* 4:+, 7:r; *Prunus spinosa* 8:1; *Pyrus pyraster* 6:+, 10:r; *Rhamnus orbiculatus* 7:+; *Rosa canina* 1:1, 2:+; *Sorbus aria* 3:+, 7:r; *Sorbus domestica* 10, r; *Viburnum lantana* 10, r;

C: *Achillea nobilis* 7:r; *Aethionema saxatile* 8:r; *Agrostis castellana* 4:+; *Anemone ranunculoides* 2:+; *Anthericum ramosum* 1:r, 9:3; *Arabis hirsuta* 9:r; *Arabis turrita* 3:+, 10:+; *Aremonia agrimonoides* 4:r, 6:r; *Asparagus tenuifolius* 10:+; *Betonica officinalis* 1:+, 3:+; *Bunium alpinum* subsp. *montanum* 4:+; *Buphthalmum salicifolium* 9:1; *Calamintha sylvatica* 10:+; *Campanula glomerata* 2:1; *Campanula trachelium* 3:+; *Carex caryophyllea* 10:+; *Carum carvi* 5:+, 7:+; *Centaurea napulifera* subsp. *tuberosa* 1:+, 3:r; *Clematis recta* 9:1; *Convolvulus cantabrica* 6:+; *Coronilla coronata* 1:+; *Cotoneaster nebrodensis* 4:r; *Crataegus laevigata* 2:1; *Dictamnus albus* 3:+, 5:+; *Epipactis atrorubens* 1:r; *Eryngium amethystinum* 6:r; *Festuca heterophylla* 3:r, 10:+; *Filipendula vulgaris* 3:+, 4:r; *Fritillaria orientalis* 2:r; *Galium lucidum* 8:+, 9:+; *Geranium lucidum* 8:+; *Geranium robertianum* 10:r; *Geranium sanguineum* 4:r; *Geum urbanum* 8:r; *Glechoma hirsuta* 3:+, 10:+; *Globularia punctata* 9:+; *Helleborus odorus* 10:+; *Hieracium hoppeanum* 5:r; *Hieracium murorum* 9:r; *Hieracium piloselloides* 4:r; *Hieracium praealtum* subsp. *bauhinii* 9:+; *Hieracium sabaudum* 9:+; *Hippocrepis comosa* 1:+, 9:+; *Hypochaeris maculata* 3:+; *Inula spiraeifolia* 3:r; *Iris graminea* 3:+; *Lathyrus venetus* 3:r, 10:1; *Leontodon hispidus* 1:+; *Leontodon incanus* 9:r; *Lilium martagon* 3:r; *Medicago falcata* 7:+; *Medicago lupulina* 8:r; *Melica ciliata* 8:r; *Melica uniflora* 3:+; *Melittis melissophyllum* 3:r, 9:+; *Orchis simia* 9:r; *Origanum vulgare* 3:+; *Ornithogalum pyrenaicum* 3:+; *Petrorhagia saxifraga* 6:+; *Peucedanum austriacum* 3:r; *Peucedanum cervaria* 3:+; *Peucedanum oreoselinum* 7:+, 9:2; *Pimpinella saxifraga* 9:r; *Platanthera bifolia* 1:r; *Poa angustifolia* 10:+; *Poa trivialis* s.l. 1:+, 6:+; *Potentilla erecta* 9:+; *Potentilla heptaphylla* 2:+, 4:r; *Potentilla hirta* 5:+, 7:+; *Potentilla micrantha* 4:+, 10:+; *Potentilla tommasiniana* 6:+; *Primula vulgaris* 3:r; *Sanguisorba minor* s.l. 6:r; *Scabiosa cinerea* 9:+; *Scutellaria altissima* 10:+; *Sedum acre* 6:+, 8:r; *Sedum ochroleucum* 6:r; *Sedum telephium* subsp. *maximum* 3:r, 8:r; *Serratula tinctoria* 3:+; *Silene nemoralis* 3:+; *Silene vulgaris* 9:+; *Smyrnium perfoliatum* 10:+; *Solidago virgaurea* 9:+; *Stachys recta* s.l. 9:r; *Teucrium montanum* 7:+; *Thalictrum minus* 7:r; *Thesium linophyllon* 4:+; *Thlaspi goesingense* 9:+; *Thymus longicaulis* 1:+, 4:+; *Trifolium montanum* 1:+; *Trifolium rubens* 3:r; *Veratrum nigrum* 3:r; *Verbascum nigrum* s.l. 8:r; *Vicia incana* 3:r;

Details of relevés (indicated in the following order: relevé number, GIVD EU-BA-001 relevé number, relevé area (m^2), altitude (m), aspect, slope (degrees), cover (%) A-B-C, species richness (total), date (year/ month/day), description of locality, latitude, longitude) : 1. 70, 400, 650, NE, 20, 60-50-40, 40, 20110608, Oreči (Posušje), 43.433086, 17.369203; 2. 4, 600, 920, SW, 15, 60-25-80, 25, 20110422, Brina (Cincar), 43.852217, 16.972696; 3. 243, 400, 670, S, 3, 20-80-70, 60, 20120627, Tarovine (Osječenica), 44.467614, 16.253619; 4. 318, 400, 880, S, 12, 70-70-70, 39, 20140701, između Posušja i Mesihovine, 43.530835, 17.284225; 5. 475, 100, 786, S, 20, 50-60-40, 34, 20140723, između Posušja i Mesihovine, 43.511384, 17.270108; 6. 116, 400, 655, S, 15, 30-90-50, 42, 20110725, Guvno (Drvar), 44.402031, 16.365373; 7. 330, 400, 808, SW, 15, 80-50-30, 40, 20140723, između Posušja i Mesihovine, 43.511836, 17.27035; 8. 244, 400, 680, S, 20, 40-70-30, 43, 20120627, Guvno (Drvar), 44.40562, 16.356532; 9. 16, 900, 440, S, 35, 50-40-95, 42, 20110511, Gomjenica-Prisoje (Manjača), 44.700182, 16.923974; 10. 306, 400, 340, NE, 20, 70-70-60, 43, 20140624, Kamenice (Bočac), 44.511213, 17.152517.

Supplement S2. *Asparago tenuifolii-Quercetum pubescentis* (A - lower tree layer, B - shrub layer, C - herb layer).
Beilage S2. *Asparago tenuifolii-Quercetum pubescentis* (A - untere Baumschicht, B - Strauchschicht, C - Krautschicht).

Relevé number		1	2	3	4	5	6	7	8	9	10	11	12	13	14	15	16	17	18
Characteristic species of the association																			
Quercus pubescens	A	4	1	4	5	3	4	4	3	3	2	5	4	2	5	4	3	3	4
	B	1	2	2	2	+	2	1	1	2	3	2	2	2	2	3	2	1	.
Brachypodium sylvaticum	C	3	+	4	1	1	2	+	1	1	3	2	1	2	+	1	+	2	.
Helleborus odorus	C	+	.	+	+	.	r	+	+	r	1	r	+	+	.	r	r	+	+
Brachypodium pinnatum s.l.	C	2	3	3	1	.	.	+	.	+	4	3	+	+	+	.	2	1	.
Carex flacca s.l.	C	1	1	.	1	.	.	.	.	.	r	.	3	+	+	2	2	2	+
Quercetalia pubescentis																			
Fraxinus ornus	A	.	3	.	.	1	.	2	.	1	.	.	.	.	2	2	2	.	2
	B	3	3	+	3	2	2	1	2	2	.	2	2	4	5	2	2	2	+
Sorbus torminalis	A	.	1	.	.	.	1	.	.	.	.	2	.	.	1	.	.	.	.
	B	2	+	+	1	+	2	.	.	.	+	2	.	+	2	.	.	+	+
Quercus cerris	A	.	.	1	1	3	.	.	.	.	.	.	.	.	.	.	.	3	.
	B	.	.	.	+	1	.	.	+	.	.	.	.	.	r	.	.	.	.
Acer obtusatum	A	.	.	.	.	.	3	.	.	1	.	2	.	.	.	.	.	.	.
	B	.	2	.	.	.	2	.	.	2	.	2	.	.	.	.	.	.	.
Cornus mas	B	.	.	2	2	+	.	.	1	+	.	.	.	+	.	.	2	2	4
Clinopodium vulgare	C	+	r	.	.	+	1	1	+	+	r	+	+	1	r	+	+	.	r
Tamus communis	C	r	+	.	.	+	.	r	+	.	+	+	r	+	1	.	+	+	+
Melittis melissophyllum	C	1	+	.	1	.	+	.	.	+	.	.	.	.	.	.	+	.	+
Festuca heterophylla	C	+	+	.	+	1	1	.	.	2	.	1	.	.	.	.	.	.	.
Iris graminea	C	+	1	.	+	+	1	.	.	1	.	1	.	.	.	.	.	.	.
Lathyrus venetus	C	1	.	.	1	.	.	+	+	.	.	.	+	.	.	+	.	+	.
Buglossoides purpurocaerulea	C	.	1	.	.	+	r	.	.	.	.	.	.	1	.	.	1	2	+
Vincetoxicum hirundinaria	C	.	+	.	.	r	r	+	.	r	.	.	.	.	.	.	1	.	+
Tanacetum corymbosum	C	r	.	.	1	.	+	.	.	+	.	+	.	.	.	.	+	.	.
Lathyrus niger	C	r	+	.	.	+	.	.	.	.	.	.	.	1	.	.	.	+	r
Calamintha sylvatica	C	+	.	.	.	.	.	1	.	.	.	.	+	+	.	+	.	+	.
Viola hirta agg.	C	.	.	.	.	.	.	r	r	+	.	r	r	.	.	.	r	.	.
Potentilla micrantha	C	.	.	.	.	.	.	r	.	.	.	+	r	+	.	r	.	.	.
Galium lucidum	C	.	.	+	.	.	.	.	.	.	+	.	1	.	.	+	+	.	.
Betonica officinalis	C	+	+	.	+	.	.	.	.	+	.	r	.	.	.	.	.	.	.
Peucedanum austriacum	C	.	+	.	.	.	r	.	.	.	.	+	.	.	.	.	.	.	.
Inula conyza	C	.	.	.	.	.	.	+	.	.	.	.	+	+	.	.	.	.	.
Querco-Fagetea																			
Quercus petraea agg.	A	3	1	.	1	.	3	.	.	2	.	.	.	.	.	.	.	.	.
	B	+	r	.	r	.	2	.	.	.	.	.	.	.	r	.	.	.	.
Acer campestre	A	.	.	.	.	1	.	.	.	.	.	.	.	.	1	1	.	+	.
	B	2	.	.	2	+	.	+	+	.	+	.	.	.	2	2	.	2	+
Tilia tomentosa	A	.	.	.	.	.	.	.	.	.	.	.	.	.	.	.	.	+	.
	B	+	.	.	+	.	.	.	.	.	.	.	.	.	2	+	.	2	.
Rosa arvensis	B	1	+	1	1	1	1	+	.	2	+	1	+	+	1	3	.	+	+
Pyrus pyraster	B	+	+	.	+	+	.	+	.	.	+	.	+	r	+	2	+	+	.
Hedera helix	B	.	.	.	+	.	+	.	r	.	.	.	.	+	+	.	+	.	+
Rubus hirtus	B	+	.	+	r	.	r	.	.	.	.	.	.	.	.	.	.	.	.
Corylus avellana	B	.	.	.	.	+	2	.	.	2	.	.	.	.	+	.	.	.	.
Cruciata glabra	C	+	+	+	+	.	+	+	+	+	+	+	+	.	.	+	+	.	.
Fragaria moschata	C	1	1	+	+	r	1	.	+	1	+	+	.	.	+	.	.	.	.
Dactylis glomerata s.l.	C	r	.	.	.	+	+	.	.	.	.	+	.	+	.	r	+	+	+
Veronica chamaedrys	C	r	.	.	.	.	.	.	+	r	.	r	.	r	.	.	.	.	.
Geum urbanum	C	.	.	.	.	+	+	.	r	+	.	r	.	.	.	.	.	.	.
Melica uniflora	C	.	.	.	.	4	1	.	.	.	.	+	.	.	.	r	.	.	.
Glechoma hirsuta	C	.	.	.	.	+	.	+	+	.	.	.	.	.	.	.	.	.	.
Carex montana	C	2	1	.	r	.	.	.	.	1	.	.	.	.	.	.	.	.	.
Galium schultesii	C	+	.	.	.	.	.	.	.	.	.	.	.	.	.	.	.	+	1
Melica nutans	C	+	1	.	.	.	.	.	.	.	r	.	.	.	.	.	.	.	.
Carpinion, Erythronio-Carpinion																			
Carpinus betulus	A	.	.	.	.	.	.	.	.	r	.	.	.	.	.	.	.	.	.
	B	+	.	+	2	.	2	.	1	.	+	.	.	.	2	.	.	.	.
Prunus avium	A	.	.	.	.	.	.	.	.	.	.	.	.	.	1	.	.	.	.
	B	+	+	.	2	+	r	.	+	.	.	r	.	.	+	.	.	.	.
Tilia platyphyllos	B	.	+	.	.	.	.	.	+	r	.	.	.	.	.	.	.	.	.
Primula vulgaris	C	+	.	.	+	.	r	.	.	.	.	.	.	.	+	.	.	.	.
Fagetalia																			
Symphytum tuberosum	C	+	.	+	.	+	+	r	.	r	+	.	r	.	+	.	r	.	.
Aremonia agrimonoides	C	r	+	.	r	+	+	.	r	r	.	.	.	.	.	.	.	.	.
Poa nemoralis	C	.	.	+	.	.	+	.	.	.	+	r	.	r	.	.	.	.	.
Pulmonaria officinalis	C	+	+	.	r	.	.	.	.	.	.	.	.	.	.	.	.	.	+
Salvia glutinosa	C	+	.	.	r	.	r	.	.	.	.	.	.	.	r	.	.	.	.
Campanula trachelium	C	+	.	.	.	.	.	.	.	.	.	.	.	.	r	.	1	.	r
Epimedium alpinum	C	r	.	r	r	.	.	.	.	.	.	.	.	.	.	.	.	.	r
Sanicula europaea	C	+	.	.	+	.	.	.	.	.	.	.	.	.	+	.	.	.	.
Asarum europaeum	C	.	+	.	r	.	.	.	r	.	.	.	.	.	.	.	.	.	.
Geranium robertianum	C	.	r	.	.	r	.	.	+	.	.	.	.	.	.	.	.	.	.
Euphorbia amygdaloides	C	.	+	.	.	.	.	.	.	.	.	.	.	.	.	.	r	.	r
Epipactis helleborine	C	r	.	r	.	.	.	.	.	.	.	.	.	.	.	.	.	.	r
Rhamno-Prunetea																			
Crataegus monogyna	B	2	2	+	2	+	r	1	+	+	r	+	+	.	+	+	.	.	+
Prunus spinosa	B	r	r	+	+	r	.	r	.	r	+	+	r	+	.	r	.	+	.
Clematis vitalba	B	.	+	+	+	+	.	+	1	.	.	.	r	+	+	r	+	.	+
Rubus canescens	B	+	.	1	+	.	.	.	.	r	1	1	+	+	.	+	.	r	.
Ligustrum vulgare	B	.	1	.	+	2	.	.	.	.	+	.	+	1	.	+	.	.	.
Cornus sanguinea	B	.	.	+	+	.	.	+	2	.	.	+	+	.	.	1	.	.	.
Cotinus coggygria	B	.	.	.	.	.	.	3	.	.	.	.	+	.	.	r	.	.	.
Trifolio-Geranietea																			
Dorycnium pentaphyllum subsp. *germanicum*	C	r	.	2	r	.	.	+	.	.	1	.	1	+	.	+	1	+	.
Peucedanum cervaria	C	r	.	.	r	.	.	.	.	.	.	.	r	1	r	r	r	.	.
Astragalus glycyphyllos	C	+	.	.	r	+	.	.	.	.	.	.	.	.	.	.	1	r	.
Coronilla varia	C	.	.	.	.	.	.	2	.	.	.	.	+	r	.	.	1	+	.
Trifolium alpestre	C	+	.	.	.	.	.	r	.	.	.	.	+	.	.	+	.	.	.
Hypericum perforatum	C	.	.	.	.	.	.	+	+	.	.	.	.	r	r	.	.	.	.
Lathyrus pratensis	C	+	.	.	.	.	.	.	r	.	.	.	r	.	.	r	.	.	.
Silene viridiflora	C	.	.	r	.	.	.	r	.	.	.	.	r	.	.	.	+	.	.
Vicia incana	C	+	.	.	.	.	r	.	+	.	.	.	.	.	.	.	.	.	.
Festuco-Brometea																			
Teucrium chamaedrys	C	r	+	1	r	.	.	1	1	.	1	.	+	1	r	+	+	1	.
Euphorbia cyparissias	C	r	r	+	.	.	.	.	.	r	+	r	.	+	.	.	.	+	.
Filipendula vulgaris	C	.	.	+	.	+	+	.	.	+	+	r	.	.	.	.	.	.	.
Carex caryophyllea	C	.	.	.	+	.	.	+	+	+	.	.	.	.	.	+	.	.	.
Allium carinatum	C	.	.	.	.	.	r	r	.	.	.	+	.	r	.	.	.	.	.
Thymus pulegioides	C	.	.	r	.	.	.	.	.	.	+	.	.	1	.	.	.	+	.
Lotus corniculatus	C	.	.	+	.	.	.	.	+	.	+	.	.	.	.	.	.	.	.
Galium verum	C	r	.	.	r	.	.	.	.	.	+	.	.	.	.	.	.	.	.
Trifolium montanum	C	r	.	+	.	.	.	.	.	.	+	.	.	.	.	.	.	.	.
Scabiosa cinerea	C	.	.	1	.	.	.	.	+	.	+	.	.	.	.	.	.	.	.
Pimpinella saxifraga	C	+	.	+	.	.	.	.	+	.	.	.	.	.	.	.	.	.	.
Companions																			
Juniperus communis	B	+	.	.	+	.	.	.	+	.	.	.	r	+	.	.	+	+	.
Chamaecytisus supinus	B	+	+	.	r	.	.	.	.	.	.	.	.	.	.	.	1	.	.
Chamaecytisus hirsutus agg.	B	.	.	+	.	.	.	.	.	.	.	.	r	.	.	r	.	.	.
Juglans regia	B	.	.	.	.	.	r	.	+	.	.	.	.	.	.	.	.	.	r
Pteridium aquilinum	C	+	.	1	r	.	+	.	+	r	1	r	.	.	r	.	.	.	.
Verbascum nigrum s.l.	C	r	.	+	.	r	.	.	.	r	.	.	r	.	.	r	.	.	.
Hieracium sabaudum	C	+	.	.	r	.	.	.	.	.	.	.	r	.	.	.	r	.	.
Galium mollugo agg.	C	.	r	.	.	.	+	.	.	1	.	+	.	.	.	.	.	.	.
Galium aparine	C	.	.	.	.	+	.	r	.	.	.	r	.	.	.	.	.	.	.

In one or two relevés:

A: *Ostrya* carpinifolia 18:1; Sorbus *aria* 9:1; *Ulmus minor* 7:+;

B: *Acer platanoides* 6:r; *Acer pseudoplatanus* 1:r, 14:r; *Acer tataricum* 14:r; *Euonymus verrucosus* 2:+; *Fagus sylvatica* 3:r, 14:r; *Lonicera xylosteum* 2:1; *Malus sylvestris* 2:r, 12:+; *Ostrya* carpinifolia 11:+, 15:+; Populus *tremula* 3:r; *Rhamnus catharticus* 5:r; *Rosa canina* 3:1, 8:+; *Rosa gallica* 5:+; *Salix caprea* 3:r; *Sorbus aria* 2:+; *Sorbus domestica* 1:r, 4:r; *Staphylea pinnata* 18:r; *Tilia cordata* 1:r; *Ulmus minor* 2:+, 7:+; *Viburnum lantana* 16:1, 18:2;

C: *Achillea millefolium* 3:r; *Ajuga reptans* 3:r; *Anemone nemorosa* 2:+, 6:+; *Anthericum ramosum* 16:1; *Aposeris foetida* 1:1, 4:+; *Arabis hirsuta* 2:r; *Arabis turrita* 2:r, 8:1; *Arum maculatum* 5:r; *Asperula purpurea* 7:+, 15:+; *Asplenium trichomanes* 2:+, 8:1; *Briza media* 10:+; *Bromus erectus* agg. 2:+, 9:+; *Bromus ramosus* agg. 2:r, 5:+; *Buphthalmum salicifolium* 5:+; *Calluna vulgaris* 3:+; *Calystegia silvatica* 7:+, 12:r; *Campanula patula* 3:r; *Campanula persicifolia* 4:r, 16:+; *Cardamine enneaphyllos* 2:r; *Cardamine impatiens* 7:1; *Carex digitata* 2:1; *Carex divulsa* s.l. 7:+, 13:r; *Carex sylvatica* 4:r, 14:r; *Cirsium arvense* 3:r, 10:+; *Colchicum autumnale* 2:+, 9:r; *Cruciata laevipes* 5:r; *Cyclamen purpurascens* 2:+; *Daucus carota* 10:r; *Digitalis ferruginea* 2:r; *Digitalis grandiflora* 15:r, 16:+; *Dryopteris filix-mas* 2:r; *Elymus repens* 7:+, 13:+; *Epipactis atrorubens* 10:r; *Epipactis microphylla* 1:r; *Ferulago sylvatica* 5:1; *Festuca pseudovina* agg. 8:+; *Helianthemum nummularium* 3:+; *Helleborus multifidus* 5:+; *Hepatica nobilis* 2:r; *Heracleum sphondylium* 9:+; *Hieracium murorum* 1:+; *Hieracium piloselloides* 7:r; *Hieracium praealtum* subsp. *bauhinii* 3:+; *Inula hirta* 16:2; *Knautia drymeia* 1:+; *Lapsana communis* 5:r; *Lathyrus vernus* 2:r, 18:+; *Lilium martagon* 2:+; *Limodorum abortivum* 13:+; *Linum usitatissimum* 3:+; *Listera ovata* 2:+; *Luzula forsteri* 6:+; *Lychnis coronaria* 5:r; *Medicago falcata* 13:+; *Medicago lupulina* 8:+; *Melica ciliata* 7:r; *Melilotus officinalis* 10:r; *Mercurialis perennis* 6:r; *Mycelis muralis* 9:r; *Myosotis sylvatica* 7:+; *Neottia nidus-avis* 6:r; *Orchis mascula* subsp. *signifera* 3:r; *Orchis purpurea* 5:+; *Origanum vulgare* 7:+; *Ornithogalum pyrenaicum* 5:r, 11:r; *Peucedanum carvifolia* 3:+, 10:+; *Peucedanum oreoselinum* 1:r, 3:+; *Picris hieracioides* 3:+, 10:+; *Plantago lanceolata* 3:+; *Plantago media* 10:+; *Platanthera bifolia* 3:r; *Platanthera chlorantha* 2:+; *Poa angustifolia* 5:r, 9:+; *Poa pratensis* 1:r, 13:+; *Poa trivialis* s.l. 3:+; *Polygala comosa* 3:+, 10:+; *Polypodium vulgare* 8:+; *Ranunculus serpens* 3:r, 10:r; *Sanguisorba minor* s.l. 3:+, 10:+; *Scutellaria altissima* 12:r, 15:r; *Sedum album* 8:2; *Sedum hispanicum* 8:+; *Sedum telephium* subsp. *maximum* 2:r, 11:r; *Serratula tinctoria* 4:r; *Silene italica* 6:+; *Silene nemoralis* 1:r; *Silene vulgaris* 10:+, 13:1; *Smyrnium perfoliatum* 5:+; *Solidago virgaurea* 16:+; *Stachys recta* s.l. 7:+; *Stellaria holostea* 7:+, 15:r; *Taraxacum officinale* 5:r; *Torilis arvensis* 8:+; *Trifolium pratense* 10:r, 12:+; *Trifolium rubens* 1:r; *Veronica officinalis* 3:r; *Veronica urticifolia* 18:r; *Vicia cassubica* 4:r, 9:r; *Vicia cordata* 1:r, 8:r; *Vicia cracca* 3:+; *Vicia hirsuta* 12:r;

Details of relevés (indicated in the following order: relevé number, GIVD EU-BA-001 relevé number, relevé area (m^2), altitude (m), aspect, slope (degrees), cover (%) A-B-C, species richness (total), date (year/ month/day), description of locality, latitude, longitude) : 1. 175, 400, 605, SE, 25, 100-90-80, 72, 20120608, Gornja Paklenica (Ozren), 44.629666, 18.162072; 2. 26, 200, 830, W, 7, 60-70-70, 63, 20110518, Lunjevac-Grabež (Grabež), 44.616287, 17.036486; 3. 37, 400, 610, S, 15, 60-30-100, 60, 20110529, Preslica-Kremenjak (Ozren), 44.632978, 18.160477; 4. 176, 400, 620, SE, 25, 100-90-50, 56, 20120608, Gornja Paklenica (Ozren), 44.629253, 18.161252; 5. 58, 600, 750, S, 10, 70-70-90, 49, 20110602, Gornja Suvaja (Bos. Petrovac), 44.620666, 16.308606; 6. 190, 400, 890, S, 15, 80-90-60, 44, 20120615, Lisina (Kozara), 44.968003, 16.971268; 7. 214, 400, 480, S, 27, 70-60-30, 45, 20120622, Ruj (Ozren), 44.626437, 18.116014; 8. 36, 200, 607, SE, 35, 40-80-10, 47, 20110529, Preslica-Kremenjak (Ozren), 44.633685, 18.160882; 9. 189, 900, 890, S, 11, 60-50-60, 43, 20120615, Lisina (Kozara), 44.968057, 16.973232; 10. 38, 200, 603, S, 15, 60-50-100, 45, 20110529, Preslica-Kremenjak (Ozren), 44.632674, 18.160281; 11. 193, 400, 740, E, 16, 90-80-60, 38, 20120615, Lisina (Kozara), 44.964543, 16.975779; 12. 217, 400, 500, S, 20, 60-80-60, 41, 20120622, Ruj (Ozren), 44.626173, 18.118823; 13. 90, 100, 375, S, 30, 40-90-90, 41, 20110701, Doborovci-Prisoje (Majevica), 44.754918, 18.377155; 14. 177, 400, 450, S, 25, 100-90-10, 34, 20120608, Gornja Paklenica (Ozren), 44.620548, 18.163193; 15. 216, 400, 530, S, 28, 70-80-50, 37, 20120622, Ruj (Ozren), 44.626669, 18.118257; 16. 86, 300, 281, SE, 22, 50-70-80, 38, 20110630, Ugljevik (Prokos), 44.683993, 18.993239; 17. 87, 200, 370, S, 40, 60-10-40, 29, 20110701, Doborovci-Prisoje (Majevica), 44.754763, 18.377393; 18. 85, 200, 285, S, 18, 70-90-10, 30, 20110630, Prokos (Ugljevik), 44.683786, 18.992483.

Supplement S3. *Aceri obtusati-Quercetum petraeae* ass. nov. hoc loco, holotypus: relevé 9 (A1 - upper tree layer, A2 - lower tree layer, B - shrub layer, C - herb layer).

Beilage S3. *Aceri obtusati-Quercetum petraeae* ass. nov. hoc loco, Holotypus: Aufnahme 9 (A1 - obere Baumschicht, A2 - untere Baumschicht, B - Strauchschicht, C - Krautschicht).

Relevé number		1	2	3	4	5	6	7	8	9	10	11	12	13	14	15	16	17	18
Characteristic species of the association																			
Quercus petraea agg.	A1	4	4	5	4	3	5	5	3	3	3	3	3	3	3	3	3	4	3
	B	.	2	2	.	3	.	1	.	1	1	2	2	1	.	+	.	.	+
	C	3	.	.	.	.	1	.	+	1	3	1	1	1	+	.	+	.	.
Carpinus orientalis	A2	4	4	1	2	5	3	4	3	2	3	3	2	5	1	2	.	2	5
	B	.	1	2	1	1	4	2	4	1	1	1	1	2	4	1	2	+	+
Carpinus betulus	A2	1	+	+	r	.	.	1	.	2	2	4	3	1	+	4	.	1	.
	B	+	+	.	.	r	+	1	r	2	+	+	.	.	.	+	+	.	+
Acer obtusatum	A2	+	2	2	.	.	.	+	1	2	.	.	+	2	+	2	+	.	.
	B	+	1	2	.	.	+	+	.	+	1	.	+	1	.	.	1	+	.
Helleborus odorus	C	+	+	r	+	+	+	+	r	+	1	+	+	+	+	+	+	1	+
Cruciata glabra	C	1	r	+	1	+	+	1	+	+	+	+	+	+	1	+	+	+	1
Quercetalia pubescentis																			
Fraxinus ornus	A2	+	1	1	+	1	+	1	1	.	1	.	+	1	+	2	2	.	.
	B	1	1	2	1	1	+	1	.	1	1	.	1	1	2	1	2	+	+
Sorbus torminalis	A2	.	.	.	+	.	.	+	.	.	1	2	.	1	.	.	+	+	.
	B	+	+	2	+	+	2	1	+	1	1	+	+	1	+	r	+	+	+
Quercus pubescens	A2	.	.	.	.	.	.	1	.	.	1	2	.	.	.	1	.	.	.
	B	.	.	.	.	.	.	+	.	.	.	+	.	.	.	+	.	.	.
Cornus mas	B	.	.	2	2	1	.	1	1	1	2	2	+	.	+	.	2	2	2
Euonymus verrucosus	B	.	.	.	+	.	.	.	1	.	.	.	.	.	r	.	.	+	+
Tamus communis	C	2	+	.	+	r	+	+	+	+	+	1	+	+	+	+	+	.	+
Festuca heterophylla	C	1	.	2	1	+	2	1	r	.	1	1	.	.	+	+	2	.	.
Potentilla micrantha	C	.	+	+	.	+	1	1	r	+	+	+	.	.	.	+	+	+	.
Lathyrus niger	C	+	+	r	.	+	.	1	+	2	2	.	+	.	.	r	.	+	.
Lathyrus venetus	C	.	.	.	+	+	1	+	.	+	.	.	.	1	+	.	+	+	.
Melittis melissophyllum	C	1	.	.	.	.	.	.	.	+	+	+	+	.	r	+	+	.	.
Tanacetum corymbosum	C	r	r	.	.	r	+	.	.	+	+	.	.	.	.	r	+	.	.
Viola hirta agg.	C	.	r	r	+	.	r	.	.	r	.	r	.	.	.	.	+	+	.
Buglossoides purpurocaerulea	C	.	.	.	+	.	+	r	+	r	1	.	.	+	.	.	.	.	.
Carex flacca s.l.	C	.	+	.	.	+	.	+	2	.	+	1	.	.	.	.	.	.	.
Veratrum nigrum	C	.	r	.	.	r	.	.	.	+	+	.	.	.	.	+	.	.	.
Clinopodium vulgare	C	.	r	+	.	.	.	.	.	.	.	+	.	.	.	.	+	.	+
Luzula forsteri	C	.	+	+	.	.	+	.	.	.	.	.	.	.	r	.	+	.	.
Calamintha sylvatica	C	.	+	.	.	.	.	.	.	.	.	.	+	.	.	.	+	+	.
Asparagus tenuifolius	C	+	.	.	.	.	+	.	.	+	r	.	.	.	.	.	.	.	.
Sesleria autumnalis	C	.	r	.	.	3	.	.	.	4	.	.	.	2	.	.	.	.	.
Campanula persicifolia	C	r	.	r	+	.	.	.	.	.	.	.	.	r	.	.	.	.	.
Platanthera chlorantha	C	.	.	.	.	.	+	.	.	+	r	.	+	.	.	.	.	.	.
Iris graminea	C	.	.	.	.	.	+	.	r	.	r	.	.	.	.	.	.	.	.
Betonica officinalis	C	.	r	.	.	.	.	.	.	.	r	.	.	.	.	.	+	.	.
Querco-Fagetea																			
Acer campestre	A2	+	+	.	+	1	.	+	.	.	1	1	+	1	+	+	.	.	+
	B	1	+	+	+	1	1	1	+	+	+	1	1	1	.	.	1	1	1
Pyrus pyraster	A2	.	1	.	+	.	.	.	1	.	.	.	.	.	.	.	.	.	.
	B	2	+	+	+	+	2	+	2	.	2	+	.	.	.	.	+	+	+
Malus sylvestris	B	1	r	.	.	r	1	.	.	.	.	.	.	.	.	.	+	.	.
Rosa arvensis	B	2	+	1	.	+	2	1	r	+	+	+	2	+	+	1	2	1	+
Hedera helix	B	.	+	+	.	+	.	+	2	r	+	.	2	r	1	r	.	.	+
Corylus avellana	B	1	.	+	.	.	.	.	.	.	.	.	+	.	+	.	.	.	r
Rubus hirtus	B	.	r	r	.	.	.	.	.	.	.	.	.	1	r	.	.	.	+
Glechoma hirsuta	C	.	.	.	3	.	1	+	+	+	r	.	+	+	+	+	+	.	4
Brachypodium sylvaticum	C	+	.	1	.	+	1	1	.	+	1	1	1	1	.	.	+	.	.
Melica uniflora	C	2	+	+	1	r	.	.	.	2	.	.	.	2	+	2	.	+	+
Dactylis glomerata s.l.	C	r	.	.	1	r	1	r	.	+	+	+	.	+	.	.	+	.	.
Ajuga reptans	C	+	r	r	.	.	.	+	r	+	+	.	.	.	.	r	.	+	+
Veronica chamaedrys	C	.	+	r	1	.	.	+	.	.	.	r	.	.	+	r	+	.	+
Galium schultesii	C	.	+	r	.	r	.	.	+	+	2	1	.	.	+	1	.	.	.
Geum urbanum	C	1	.	.	1	.	+	.	.	+	.	.	.	.	+	.	+	.	1
Fragaria moschata	C	.	.	.	+	+	.	+	+	.	.	1	.	1	.	.	.	.	+
Poa nemoralis	C	+	.	.	.	.	.	.	.	.	r	.	.	.	.	r	.	.	1
Hepatica nobilis	C	.	.	.	.	.	.	.	.	+	.	.	.	.	.	+	.	+	.
Carpinion, Erythronio-Carpinion																			
Prunus avium	A2	.	+	.	.	.	.	.	.	.	1	.	.	.	.	1	.	.	.
	B	1	+	.	+	r	+	r	2	+	1	1	2	+	+	.	1	.	.
Tilia platyphyllos	A1	.	.	.	.	.	.	.	.	1	.	.	.	.	.	.	.	.	.
	B	.	.	.	.	.	.	.	.	r	.	.	+	r	.	.	.	.	.
Primula vulgaris	C	+	.	r	+	+	r	+	.	1	1	+	.	+	+	1	1	+	+
Aposeris foetida	C	.	.	r	.	.	.	1	.	+	1	.	1	.	.	+	.	1	.
Cyclamen purpurascens	C	.	.	.	.	.	.	.	r	+	.	.	.	r	.	+	+	+	+
Ornithogalum pyrenaicum	C	r	.	.	+	.	.	.	.	.	.	.	.	1	.	+	.	.	.
Fagetalia																			
Fagus sylvatica	B	.	r	.	.	.	.	.	.	+	.	+	.	.	.	r	.	.	.
Sanicula europaea	C	1	.	.	+	r	.	+	.	1	+	+	2	+	+	r	.	+	.
Symphytum tuberosum	C	1	.	.	+	.	+	r	r	+	+	.	+	+	+	+	.	.	+
Aremonia agrimonoides	C	1	+	.	1	+	.	1	.	.	.	r	.	+	+	+	+	+	1
Stellaria holostea	C	1	.	+	1	.	1	.	.	+	+	.	.	1	.	+	+	+	2
Pulmonaria officinalis	C	.	.	.	+	.	.	.	.	+	+	.	+	+	+	+	.	.	+
Lathyrus vernus	C	1	r	+	.	.	+	.	r	.	+	.	.	.	.	+	+	.	.
Cephalanthera longifolia	C	.	+	.	.	.	.	r	.	.	.	+	+	r	r	.	.	.	.
Cardamine bulbifera	C	.	.	.	.	.	.	.	r	.	r	.	.	+	+	+	.	.	+
Carex sylvatica	C	.	.	.	.	r	.	.	+	+	1	.	2	+	.	.	.	.	.
Asarum europaeum	C	+	.	r	.	.	.	.	.	+	.	.	.	r	.	.	.	+	.
Lilium martagon	C	.	r	.	.	r	.	.	r	+	.	.	.	.	.	+	.	.	.
Galium odoratum	C	.	r	.	.	r	.	.	.	.	.	.	+	.	.	+	.	.	.
Campanula trachelium	C	.	.	r	.	.	.	.	.	r	.	r	.	.	.	r	.	.	.
Polygonatum multiflorum	C	.	+	.	.	.	.	.	r	+	.	.	.	.	.	+	.	.	.
Euphorbia amygdaloides	C	.	.	.	.	.	.	.	.	r	+	.	.	.	+	.	.	.	.
Anemone nemorosa	C	.	.	.	.	.	.	.	r	1	.	.	.	.	.	1	.	.	.
Polystichum setiferum	C	.	r	.	.	.	.	.	.	.	.	.	.	+	+	.	.	.	.
Geranium robertianum	C	.	.	.	.	.	.	.	.	.	.	.	.	r	.	.	.	+	.
Rhamno-Prunetea																			
Crataegus monogyna	B	2	+	+	+	2	+	+	+	+	2	2	+	+	2	r	2	.	2
Ligustrum vulgare	B	2	.	+	1	+	+	+	+	+	+	1	+	1	2	.	2	+	2
Viburnum lantana	B	2	.	.	+	.	.	r	+	+	2	.	+	.	.	+	2	.	2
Clematis vitalba	B	.	.	.	.	.	+	.	.	.	.	+	+	+	.	.	+	+	+
Cornus sanguinea	B	.	+	+	.	.	.	.	.	.	.	.	2	.	.	.	.	.	.
Prunus spinosa	B	.	.	.	.	r	.	.	.	.	.	.	+	.	.	.	+	.	.
Companions																			
Acer tataricum	B	.	.	.	+	.	.	.	2	+	+	1	+	.	.	.	.	.	.
Juniperus communis	B	.	+	.	.	.	1	r	.	.	+	r	.	.	.	.	.	.	.
Fragaria vesca	C	.	.	.	.	.	.	.	.	+	+	.	+	+	+	+	.	.	+
Hieracium sabaudum	C	.	.	.	.	r	1	1	.	.	r	r	.	r	.	.	.	.	.
Pteridium aquilinum	C	.	.	r	r	.	.	.	.	.	r	+	+	.	.	.	.	.	.
Smyrnium perfoliatum	C	.	.	.	+	.	r	.	.	.	+	.	.	.	.	1	.	.	+
Asplenium trichomanes	C	.	.	.	.	r	.	.	.	.	.	.	.	+	+	.	.	.	.
Galium mollugo agg.	C	.	.	.	+	.	.	.	.	.	.	+	.	.	.	.	r	.	.
Colchicum autumnale	C	+	.	.	.	.	.	.	.	.	r	.	.	.	.	+	.	.	.
Serratula tinctoria	C	.	.	.	.	.	r	.	.	+	+	.	.	.	.	.	.	.	.

In one or two relevés:

A1: *Acer pseudoplatanus* 15:1; *Fagus sylvatica* 9:1; *Quercus cerris* 11:2; *Tilia tomentosa* 8:2;

A2: *Acer hyrcanum* subsp. *intermedium* 16:+; *Acer monspessulanum* 15:1; *Cotinus coggygria* 8:1; *Populus tremula* 4:r; *Quercus robur* 4:r, 16:1;

B: *Acer hyrcanum* subsp. *intermedium* 16:+; *Acer monspessulanum* 9:+; *Acer pseudoplatanus* 12:r; *Chamaecytisus hirsutus* agg. 10:r; *Cotinus coggygria* 8:2; *Euonymus europaeus* 16:+; *Genista tinctoria* 2:r; *Ilex aquifolium* 12:+; *Juglans regia* 6:r; *Rosa canina* 16:+; *Rosa gallica* 4:+; *Rubus canescens* 11:r, 17:+; *Rubus fruticosus* agg. 16:+; *Ruscus aculeatus* 8:1; *Ruscus hypoglossum* 8:+; *Sorbus domestica* 10:+; *Tilia tomentosa* 16:+; *Ulmus glabra* 12:+;

C: *Acer tataricum* 4:+, 8:+; *Aegopodium podagraria* 4:r; *Agrimonia eupatoria* 12:+; *Allium carinatum* 16:r, 17:+; *Anemone ranunculoides* 13:+; *Anthyllis vulneraria* s.l. 16:r; *Arabis turrita* 13:r; *Aristolochia lutea* 12:+, 14:+; *Arum maculatum* 15:+; *Asplenium adiantum-nigrum* 5:+; *Brachypodium pinnatum* s.l. 10:r, 11:1; *Bromus ramosus* agg. 15:r; *Campanula rapunculus* 4:r; *Carex caryophyllea* 3:r, 11:+; *Carex digitata* 13:+; *Carex divulsa* s.l. 3:r; *Carex humilis* 17:+; *Carex montana* 10:+, 18:r; *Carex pilosa* 9:1, 15:2; *Centaurium erythraea* 17:r; *Cephalanthera damasonium* 10:r; *Crocus vernus* 10:+, 15:+; *Daucus carota* 16:r; *Dorycnium pentaphyllum* subsp. *germanicum* 11:r; *Dryopteris filix-mas* 15:+; *Epimedium alpinum* 8:+, 12:3; *Epipactis helleborine* 12:r; *Erythronium dens-canis* 15:r; *Euphorbia cyparissias* 11:r, 16:r; *Fagus sylvatica* 17:+; *Festuca drymeja* 8:+; *Festuca pseudovina* agg. 11:+; *Filipendula vulgaris* 17:+; *Fragaria viridis* 6:1, 16:2; *Galanthus nivalis* 15:+; *Galium lucidum* 3:+, 17:r; *Geranium phaeum* 16:r; *Heracleum sphondylium* 12:+; *Hieracium pilosella* 17:r; *Knautia drymeia* 10:r, 12:+; *Lamiastrum galeobdolon* s.l. 15:r, 18:1; *Lapsana communis* 3:+, 4:r; *Limodorum abortivum* 12:r; *Luzula pilosa* 18:+; *Melampyrum nemorosum* 5:r, 10:+; *Melica nutans* 8:+, 10:+; *Mercurialis perennis* 13:r; *Milium effusum* 3:r; *Moehringia trinervia* 2:r; *Monotropa hypopitys* 1:r; *Mycelis muralis* 4:r, 12:+; *Neottia nidus-avis* 1:1; *Orchis mascula* subsp. *signifera* 8:r; *Orchis pallens* 8:r; *Orchis purpurea* 10:+; *Peltaria alliacea* 16:r; *Peucedanum cervaria* 10:r; *Pimpinella saxifraga* 11:+; *Poa angustifolia* 11:+; *Poa bulbosa* 18:+; *Poa pratensis* 18:+; *Poa stiriaca* 1:+; *Poa trivialis* s.l. 11:+; *Prunella laciniata* 17:r; *Prunella vulgaris* 16:+, 18:+; *Quercus robur* 16:+; *Salvia glutinosa* 11:r; *Scabiosa cinerea* 17:r; *Scrophularia canina* 4:r; *Sedum ochroleucum* 4:+; *Sedum telephium* subsp. *maximum* 5:r; *Silene viridiflora* 3:r, 10:r; *Taraxacum officinale* 7:r, 18:r; *Teucrium chamaedrys* 17:+; *Torilis arvensis* 3:r; *Vicia incana* 6:r; *Vicia sepium* 16:+; *Vincetoxicum hirundinaria* 5:r, 8:r;

Details of relevés (indicated in the following order: relevé number, GIVD EU-BA-001 relevé number, relevé area (m^2), altitude (m), aspect, slope (degrees), cover (%) A1-A2-B-C, species richness (total), date (year/ month/day), description of locality, latitude, longitude): 1. 357, 600, 630, W, 7, 70-90-40-70, 42, 20060714, Lokvari (Čemernica), 44.478096, 17.221944; 2. 273, 900, 670, SE, 20, 60-80-20-20, 44, 20120715, Macanovići (Gornji Ribnik), 44.414359, 16.791114; 3. 205, 900, 550, S, 20, 80-20-90-40, 44, 20120619, Pod Kozaračkim kamenom (Kozara), 44.999114, 16.851495; 4. 353, 400, 390, SW, 24, 70-10-20-50, 47, 20060622, Zanjive (Čemernica), 44.482548, 17.189132; 5. 272, 400, 630, SW, 25, 50-90-10-60, 43, 20120715, Macanovići (Gornji Ribnik), 44.415449, 16.79457; 6. 382, 400, 740, S, 16, 80-30-80-75, 42, 20070428, Gradina-Lakići (Čemernica), 44.481725, 17.232884; 7. 308, 400, 330, S, 12, 90-70-40-50, 40, 20140624, Ćićina kosa-Gradina (Bočac), 44.545322, 17.147555; 8. 20, 400, 390, SE, 22, 40-60-75-35, 49, 20110512, Orlovača (Starčevica), 44.746764, 17.183268; 9. 124, 900, 575, W, 15, 60-90-20-70, 57, 20120519, Šehovci-Kalabuša (Manjača), 44.47012, 17.153803; 10. 117, 400, 545, W, 15, 35-70-30-70, 67, 20120519, Šehovci-Kojići (Manjača), 44.47, 17.151052; 11. 140, 400, 396, SE, 15, 40-90-20-20, 49, 20120528, Čokori (Manjača), 44.792985, 17.106228; 12. 1083, 400, 350, SW, 22, 40-30-70-70, 50, 20030514, Cer (Starčevica), 44.750141, 17.210474; 13. 125, 400, 508, NE, 20, 40-90-50-80, 49, 20120519, Dabrac-Bujadnica (Manjača), 44.486072, 17.157986; 14. 1099, 400, 560, SE, 20, 50-70-90-20, 40, 20100615, Međugorje-Gajići (Manjača), 44.680146, 17.068446; 15. 123, 900, 573, NE, 22, 50-40-10-60, 59, 20120519, Šehovci-Budelj (Manjača), 44.466552, 17.158128; 16. 391, 400, 505, -, 4, 45-10-80-40, 56, 20070811, Gajevi (Čemernica), 44.498221, 17.193166; 17. 355, 400, 480, W, 14, 70-20-5-10, 42, 20060711, Papazov do (Čemernica), 44.51283, 17.1908; 18. 403, 400, 550, W, 7, 40-90-30-90, 44, 20090513, Duge njive (Čemernica), 44.542332, 17.18897.

ZOBODAT - www.zobodat.at

Zoologisch-Botanische Datenbank/Zoological-Botanical Database

Digitale Literatur/Digital Literature

Zeitschrift/Journal: Tuexenia - Mitteilungen der Floristisch-soziologischen Arbeitsgemeinschaft

Jahr/Year: 2015

Band/Volume: NS_35

Autor(en)/Author(s): Stupar Vladimir, Milanovic [MilanoviÄ‡] Dordije [ÄorÄ‘ije], Brujic [BrujiÄ‡] Jugoslav, Carni [ÄŒarni] Andraz [AndraÅ¾]

Artikel/Article: Formalized classification and nomenclatural revision of thermophilous deciduous forests (Quercetalia pubescentis) of Bosnia and Herzegovina 85-130